KPDES FORM 1

AI-3148

KENTUCKY POLLUTANT DISCHARGE ELIMINATION SYSTEM

RECEIVED
AUG 14 2006
KPDES BRANCH

PERMIT APPLICATION

This is an application to: (check one)

- ☐ Apply for a new permit.
- ☒ Apply for reissuance of expiring permit.
- ☐ Apply for a construction permit.
- ☐ Modify an existing permit.
  Give reason for modification under Item II.A.

A complete application consists of this form and one of the following:
Form A, Form B, Form C, Form F, or Short Form C

For additional information contact:
KPDES Branch (502) 564-3410

chk 640

I. FACILITY LOCATION AND CONTACT INFORMATION	AGENCY USE	0	0	0	. 2	0	2	0

A. Name of business, municipality, company, etc. requesting permit
Kentucky Utilities Company

B. Facility Name and Location	C. Facility Owner/Mailing Address
Facility Location Name: E.W. Brown Generating Station	Owner Name: Kentucky Utilities Company Attention: Sharon L. Dodson
Facility Location Address (i.e. street, road, etc.): 815 DIX DAM RD ~~Cudsville Road P.O. Box R~~ per: Roger Medina	Mailing Street: P.O Box 32010
Facility Location City, State, Zip Code: Harrodsburg ~~Burgin,~~ KY ~~40310-0380~~ 40330-9282	Mailing City, State, Zip Code: Louisville, KY 40232-
	Telephone Number: 502-627-2774

II. FACILITY DESCRIPTION

A. Provide a brief description of activities, products, etc: Fossil-fuel fired steam electric generating station

B. Standard Industrial Classification (SIC) Code and Description

Principal SIC Code & Description:	4911 Electric Services		
Other SIC Codes:			

III. FACILITY LOCATION

A. Attach a U.S. Geological Survey 7 ½ minute quadrangle map for the site. (See instructions)

B. County where facility is located: Mercer	City where facility is located (if applicable): Burgin
C. Body of water receiving discharge: Herrington Lake	
D. Facility Site Latitude (degrees, minutes, seconds): 37 47' 16"	Facility Site Longitude (degrees, minutes, seconds): 84 42' 47"
E. Method used to obtain latitude & longitude (see instructions):	USGS Map
F. Facility Dun and Bradstreet Number (DUNS #) (if applicable):	006944938

IV. OWNER/OPERATOR INFORMATION

A. Type of Ownership:
☐ Publicly Owned ☒ Privately Owned ☐ State Owned ☐ Both Public and Private Owned ☐ Federally owned

B. Operator Contact Information (See instructions)

Name of Treatment Plant Operator: Kentucky Utilities Co (state-approved septic tank-lateral field)	Telephone Number: 859-748-4411
Operator Mailing Address (Street): Curdsville Road P.O. Box R	
Operator Mailing Address (City, State, Zip Code): Burgin, KY 40310-0380	
Is the operator also the owner? Yes ☒ No ☐	Is the operator certified? If yes, list certification class and number below. Yes ☐ No ☒
Certification Class: NA	Certification Number: NA

V. EXISTING ENVIRONMENTAL PERMITS

Current NPDES Number: KY 0002020	Issue Date of Current Permit: 09/17/2001	Expiration Date of Current Permit: 01/31/2007
Number of Times Permit Reissued: 6	Date of Original Permit Issuance: 12/31/74	Sludge Disposal Permit Number: NA
Kentucky DOW Operational Permit #: NA	Kentucky DSMRE Permit Number(s): NA	

C. Which of the following additional environmental permit/registration categories will also apply to this facility?

CATEGORY	EXISTING PERMIT WITH NO.	PERMIT NEEDED WITH PLANNED APPLICATION DATE
Air Emission Source	KY Division for Air Quality Title V Permit V-03-034	
Solid or Special Waste	KY Division for Waste Management Permit-By-Rule	
Hazardous Waste - Registration or Permit	KY Division for Waste Management Registration ID# KYD000622951	

VI. DISCHARGE MONITORING REPORTS (DMRs)

KPDES permit holders are required to submit DMRs to the Division of Water on a regular schedule (as defined by the KPDES permit). The information in this section serves to specifically identify the department, office or individual you designate as responsible for submitting DMR forms to the Division of Water.

A. Name of department, office or official submitting DMRs:	John W. Moffett, Mgr, Sys.Lab & Environmental Compliance
B. Address where DMR forms are to be sent. (Complete only if address is different from mailing address in Section I.)	
DMR Mailing Name:	John W. Moffett
DMR Mailing Street:	US 42 P.O. Box 437
DMR Mailing City, State, Zip Code:	Ghent, KY 41045
DMR Official Telephone Number:	859-367-1263

VII. APPLICATION FILING FEE

KPDES regulations require that a permit applicant pay an application filing fee equal to twenty percent of the permit base fee. Please examine the base and filing fees listed below and in the Form 1 instructions and enclose a check payable to "Kentucky State Treasurer" for the appropriate amount. Descriptions of the base fee amounts are given in the "General Instructions."

Facility Fee Category:	Filing Fee Enclosed:
Major Industry ✓	$ 640.00

VIII. CERTIFICATION

I certify under penalty of law that this document and all attachments were prepared under my direction or supervision in accordance with a system designed to assure that qualified personnel properly gather and evaluate the information submitted. Based on my inquiry of the person or persons who manage the system, or those persons directly responsible for gathering the information, the information submitted is, to the best of my knowledge and belief, true, accurate, and complete. I am aware that there are significant penalties for submitting false information, including the possibility of fine and imprisonment for knowing violations.

NAME AND OFFICIAL TITLE (type or print):	TELEPHONE NUMBER (area code and number):
John N. Voyles, Vice President Regulated Generation	502-627-4762
SIGNATURE John N. Voyles Jr	DATE: 8/14/06

KPDES FORM C

KENTUCKY POLLUTANT DISCHARGE ELIMINATION SYSTEM

PERMIT APPLICATION

A complete application consists of this form and Form 1.
For additional information, contact KPDES Branch, (502) 564-3410.

Name of Facility: E. W. Brown Generating Station	County: Mercer
I. OUTFALL LOCATION	AGENCY USE

For each outfall list the latitude and longitude of its location to the nearest 15 seconds and the name of the receiving water.

Outfall No. (list)	LATITUDE			LONGITUDE			RECEIVING WATER (name)
	Degrees	Minutes	Seconds	Degrees	Minutes	Seconds	
001	37	47	03	84	43	09	Herrington Lake
002	37	47	11	84	42	46	Herrington Lake
003	37	47	13	84	42	52	Herrington Lake
005	37	46	59	84	42	32	(Intake)

II. FLOWS, SOURCES OF POLLUTION, AND TREATMENT TECHNOLOGIES

A. Attach a line drawing showing the water flow through the facility. Indicate sources of intake water, operations contributing wastewater to the effluent, and treatment units labeled to correspond to the more detailed descriptions in Item B. Construct a water balance on the line drawing by showing average flows between intakes, operations, treatment units, and outfall. If a water balance cannot be determined (e.g., for certain mining activities), provide a pictorial description of the nature and amount of any sources of water and any collection or treatment measures.

B. For each outfall, provide a description of: (1) all operations contributing wastewater to the effluent, including process wastewater, sanitary wastewater, cooling water, and storm water runoff; (2) the average flow contributed by each operation; and (3) the treatment received by the wastewater. Continue on additional sheets if necessary.

OUTFALL NO. (list)	OPERATION(S) CONTRIBUTING FLOW		TREATMENT	
	Operation (list)	Avg/Design Flow (include units)	Description	List Codes from Table C-1
001	Combined: Ash Sluice Waters, FGD Gypsum Sluice Waters,	8.84 MGD 2.19 MGD	Mixing,	1-O
Combined Flows & Internal Outfalls	Low Volume Wastes,	1.19 MGD	Settling	1-U
	Metal Cleaning Wastes (Intern.004)	0 MGD	Chemical Precipitation	2-C
	Precipitation	0.49 MGD		
002	Cooling Tower Blowdown (U1-2),	0.22 MGD	Disinfection (Other)	2-H
	Precipitation	0.004 MGD		
003	Cooling Tower Blowdown (U3) & Misc Heat Exchangers	0.03 MGD	Disinfection (Other)	2-H
	Precipitation	0.006 MGD		

II. FLOWS, SOURCES OF POLLUTION, AND TREATMENT TECHNOLOGIES (Continued)

C. Except for storm water runoff, leaks, or spills, are any of the discharges described in Items II-A or B intermittent or seasonal?

☐ Yes (Complete the following table.) ☒ No (Go to Section III.)

OUTFALL NUMBER (list)	OPERATIONS CONTRIBUTING FLOW (list)	FREQUENCY		FLOW				
		Days Per Week (specify average)	Months Per Year (specify average)	Flow Rate (in mgd)		Total volume (specify with units)		Duration (in days)
				Long-Term Average	Maximum Daily	Long-Term Average	Maximum Daily	

III. MAXIMUM PRODUCTION

A. Does an effluent guideline limitation promulgated by EPA under Section 304 of the Clean Water Act apply to your facility?

☒ Yes (Complete Item III-B) List effluent guideline category: 40 CFR Part 423

☐ No (Go to Section IV)

B. Are the limitations in the applicable effluent guideline expressed in terms of production (or other measures of operation)?

☐ Yes (Complete Item III-C) ☒ No (Go to Section IV)

C. If you answered "Yes" to Item III-B, list the quantity which represents the actual measurement of your maximum level of production, expressed in the terms and units used in the applicable effluent guideline, and indicate the affected outfalls.

MAXIMUM QUANTITY			Affected Outfalls (list outfall numbers)
Quantity Per Day	Units of Measure	Operation, Product, Material, Etc. (specify)	

IV. IMPROVEMENTS

A. Are you now required by any federal, state or local authority to meet any implementation schedule for the construction, upgrading, or operation of wastewater equipment or practices or any other environmental programs which may affect the discharges described in this application? This includes, but is not limited to, permit conditions, administrative or enforcement orders, enforcement compliance schedule letters, stipulations, court orders and grant or loan conditions.

☐ Yes (Complete the following table) ☒ No (Go to Item IV-B)

IDENTIFICATION OF CONDITION AGREEMENT, ETC.	AFFECTED OUTFALLS		BRIEF DESCRIPTION OF PROJECT	FINAL COMPLIANCE DATE	
	No.	Source of Discharge		Required	Projected

B. OPTIONAL: You may attach additional sheets describing any additional water pollution control programs (or other environmental projects which may affect your discharges) you now have under way or which you plan. Indicate whether each program is now under way or planned, and indicate your actual or planned schedules for construction.

V. INTAKE AND EFFLUENT CHARACTERISTICS

A, B, & C: See instructions before proceeding – Complete one set of tables for each outfall – Annotate the outfall number in the space provided.
NOTE: Tables V-A, V-B, and V-C are included on separate sheets numbered 5-18.

D. Use the space below to list any of the pollutants (refer to SARA Title III, Section 313) listed in Table C-3 of the instructions, which you know or have reason to believe is discharged or may be discharged from any outfall. For every pollutant you list, briefly describe the reasons you believe it to be present and report any analytical data in your possession.

POLLUTANT	SOURCE	POLLUTANT	SOURCE
Ammonia & Ammonium Hydroxide, Sodium Phosphate (dibasic & tribasic)	Boiler/Feedwater System pH Control & Buffering		
Sodium Hypochlorite	Potable Water Treatment		
Sodium Hydroxide & Sulfuric Acid	Demineralizer Regenerant Chemicals		
Sodium Bisulfite	Demineralized Water Treatment Dechlorination		
Sodium Nitrite/Nitrate	Closed Cooling Corrosion Inhibiter		

VI. POTENTIAL DISCHARGES NOT COVERED BY ANALYSIS

A. Is any pollutant listed in Item V-C a substance or a component of a substance which you use or produce, or expect to use or produce over the next 5 years as an immediate or final product or byproduct?

☐ Yes (List all such pollutants below) ☒ No (Go to Item VI-B)

B. Are your operations such that your raw materials, processes, or products can reasonably be expected to vary so that your discharge of pollutants may during the next 5 years exceed two times the maximum values reported in Item V?

☐ Yes (Complete Item VI-C) ☒ No (Go to Item VII)

C. If you answered "Yes" to Item VI-B, explain below and describe in detail to the best of your ability at this time the sources and expected levels of such pollutants which you anticipate will be discharged from each outfall over the next 5 years. Continue on additional sheets if you need more space.

VII. BIOLOGICAL TOXICITY TESTING DATA

Do you have any knowledge of or reason to believe that any biological test for acute or chronic toxicity has been made on any of your discharges or on a receiving water in relation to your discharge within the last 3 years?

☒ Yes (Identify the test(s) and describe their purposes below) ☐ No (Go to Section VIII)

Toxicity Control & Biomonitoring Program Testing was incorporated into the current KPDES for Outfall 001 discharge including:
1. a 48-hour static toxicity test with Ceriodaphnia sp.;
2. a 48-hour static toxicity test with fathead minnow

These tests were performed at least annually and indicated full compliance with the KPDES toxicity limits.

VIII. CONTRACT ANALYSIS INFORMATION

Were any of the analyses reported in Item V performed by a contract laboratory or consulting firm?

☒ Yes (list the name, address, and telephone number of, and pollutants analyzed by each such laboratory or firm below) ☐ No (Go to Section IX)

NAME	ADDRESS	TELEPHONE (Area code & number)	POLLUTANTS ANALYZED (list)
Microbac-EnviroData Group Laboratory	2520 Regency Road Lexington, KY 40503	859-276-3506	Biomonitoring and chemical composition analyses

IX. CERTIFICATION

I certify under penalty of law that this document and all attachments were prepared under my direction or supervision in accordance with a system designed to assure that qualified personnel properly gather and evaluate the information submitted. Based on my inquiry of the person or persons who manage the system, or those persons directly responsible for gathering the information, the information submitted is, to the best of my knowledge and belief, true, accurate, and complete. I am aware that there are significant penalties for submitting false information, including the possibility of fine and imprisonment for knowing violations.

NAME AND OFFICIAL TITLE (type or print):	TELEPHONE NUMBER (area code and number):
John N. Voyles, Vice President Regulated Generation	502-627-4762
SIGNATURE John N. Voyles Jr	DATE 8/14/06

PLEASE PRINT OR TYPE IN THE UNSHADED AREAS ONLY. You may report some or all of this information on separate sheets (use the same format) instead of completing these pages. (See instructions)

E. W. Brown – Ash Treatment Basin

V. INTAKE AND EFFLUENT CHARACTERISTICS (Continued from page 3 of Form C) | **OUTFALL NO. 001**

Part A – You must provide the results of at least one analysis for every pollutant in this table. Complete one table for each outfall. See instructions for additional details.

1. POLLUTANT	2. EFFLUENT							3. UNITS (specify if blank)		4. INTAKE (optional)		
	a. Maximum Daily Value		b. Maximum 30-Day Value (if available)		c. Long-Term Avg. Value (if available)		d. No. of Analyses	a. Concentration	b. Mass	a. Long-Term Avg. Value		b. No of Analyses
	(1) Concentration	(2) Mass	(1) Concentration	(2) Mass	(1) Concentration	(2) Mass				(1) Concentration	(2) Mass	
a. Biochemical Oxygen Demand (BOD)	BDL						1	mg/L		BDL		1
b. Chemical Oxygen Demand (COD)	1.68						1	mg/L		1.83		1
c. Total Organic Carbon (TOC)	1.4						1	mg/L		3.0		1
d. Total Suspended Solids (TSS)	37				17.2		25	mg/L		1.03		53
e. Ammonia (as N)	BDL						1	mg/L		BDL		1
f. Flow (in units of MGD)	VALUE	16.3	VALUE		VALUE	6.71	49		MGD	VALUE	22.5	53
g. Temperature (winter)	VALUE	N/A	VALUE		VALUE				°c	VALUE	N/A	
h. Temperature (summer)	VALUE	22.9	VALUE		VALUE		1		°c	VALUE	14.2	53
i. pH	MINIMUM 7.6	MAXIMUM 8.4	MINIMUM	MAXIMUM			25	STANDARD UNITS				

Part B - In the MARK "X" column, place an "X" in the Believed Present column for each pollutant you know or have reason to believe is present. Place an "X" in the Believed Absent column for each pollutant you believe to be absent. If you mark the Believed Present column for any pollutant, you must provide the results of at least one analysis for that pollutant. Complete one table for each outfall. See the instructions for additional details and requirements.

1. POLLUTANT AND CAS NO. (if available)	2. MARK "X"		3. EFFLUENT							4. UNITS		6. INTAKE (optional)		
	a. Believed Present	b. Believed Absent	a. Maximum Daily Value		b. Maximum 30-Day Value (if available)		c. Long-Term Avg. Value (if available)		d. No. of Analyses	a. Concentration	b. Mass	a. Long-Term Avg Value		b. No. of Analyses
			(1) Concentration	(2) Mass	(1) Concentration	(2) Mass	(1) Concentration	(2) Mass				(1) Concentration	(2) Mass	
a. Bromide (24959-67-9)	X		BDL						1	mg/L		BDL		1
b. Bromine Total Residual	X		*						*	mg/L		*		*
c. Chloride	X		13						1	mg/L		7.9		1
d. Chlorine, Total Residual	X		BDL						1	mg/L		BDL		1
e. Color	X		65						1	ADMI		12		1
f. Fecal Coliform	X		BDL						1	C/100 ml		BDL		1
g. Fluoride (16984-48-8)	X		0.77						1	mg/L		BDL		1
h. Hardness (as $CaCO_3$)	X		324				269		25	mg/L		152		53
i. Nitrate – Nitrite (as N)	X		0.49						1	mg/L		0.90		1
j. Nitrogen, Total Organic (as N)	X		0.235						1	mg/L		0.27		1
k. Oil and Grease	X		7				BDL		25	mg/L		BDL		1
l. Phosphorous (as P), Total 7723-14-0	X		0.09						1	mg/L as P		0.03		1
m. Radioactivity														
(1) Alpha, Total		X								mg/L				
(2) Beta, Total		X								mg/L				
(3) Radium Total		X								mg/L				
(4) Radium, 226, Total		X								mg/L				

* Total Residual Chlorine analysis reflects all oxidants present (per KPDES permit), no standard Total Residual Bromine analysis method currently exists

Part B – Continued

1. POLLUTANT And CAS NO. (if available)	2. MARK "X"		3. EFFLUENT							4. UNITS		5. INTAKE (optional)		
	a. Believed Present	b. Believed Absent	a. Maximum Daily Value		b. Maximum 30-Day Value (if available)		c. Long-Term Avg. Value (if available)		d. No. of Analyses	a. Concentration	b. Mass	a. Long-Term Avg. Value		b. No. of Analyses
			(1) Concentration	(2) Mass	(1) Concentration	(2) Mass	(1) Concentration	(2) Mass				(1) Concentration	(2) Mass	
n. Sulfate (as SO_4) (14808-79-8)	X		200						1	mg/L		65		1
o. Sulfide (as S)	X		0.2						1	mg/L		0.3		1
p. Sulfite (as SO_4) (14286-46-3)	X		2						1	mg/L		BDL		1
q. Surfactants	X		BDL						1	mg/L MBAS		BDL		1
r. Aluminum, Total (7429-90)	X		1						1	mg/L		BDL		1
s. Barium, Total (7440-39-3)	X		0.22						1	mg/L		0.03		1
t. Boron, Total (7440-42-8)	X		0.67						1	mg/L		BDL		1
u. Cobalt, Total (7440-48-4)	X		BDL						1	mg/L		BDL		1
v. Iron, Total (7439-89-6)	X		0.84						1	mg/L		BDL		1
w. Magnesium Total (7439-96-4)	X		14						1	mg/L		8.5		1
x. Molybdenum Total (7439-98-7)	X		BDL						1	mg/L		BDL		1
y. Manganese, Total (7439-96-6)	X		0.22						1	mg/L		BDL		1
z. Tin, Total (7440-31-5)	X		BDL						1	mg/L		BDL		1
aa. Titanium, Total (7440-32-6)	X		0.06						1	mg/L		BDL		1

Part C – If you are a primary industry and this outfall contains process wastewater, refer to Table C-2 in the instructions to determine which of the GC/MS fractions you must test for. Mark "X" in the **Testing Required** column for all such GC/MS fractions that apply to your industry and for ALL toxic metals, cyanides, and total phenols. If you are not required to mark this column (secondary industries, nonprocess wastewater outfalls, and non-required GC/MS fractions), mark "X" in the **Believed Present** column for each pollutant you know or have reason to believe is present. Mark "X: in the **Believed Absent** column for each pollutant you believe to be absent. If you mark either the **Testing Required** or **Believed Present** columns for any pollutant, you must provide the result of at least one analysis for that pollutant. Note that there are seven pages to this part; please review each carefully. Complete one table (all seven pages) for each outfall. See instructions for additional details and requirements.

1. POLLUTANT And CAS NO. (if available)	2. MARK "X"			3. EFFLUENT							4. UNITS		5. INTAKE (optional)		
	a. Testing Required	a. Believed Present	b. Believed Absent	a. Maximum Daily Value		b. Maximum 30-Day Value (if available)		c. Long-Term Avg. Value (if available)		d. No. of Analyses	a. Concentration	b. Mass	a. Long-Term Avg Value		b. No. of Analyses
				(1) Concentration	(2) Mass	(1) Concentration	(2) Mass	(1) Concentration	(2) Mass				(1) Concentration	(2) Mass	
METALS, CYANIDE AND TOTAL PHENOLS															
1M. Antimony Total (7440-36-0)	X			0.026				0.012		5	mg/L		0.094		5
2M. Arsenic, Total (7440-38-2)	X			0.204				0.080		5	mg/L		0.021		5
3M. Beryllium Total (7440-41-7)	X			BDL				BDL		5	mg/L		BDL		5
4M. Cadmium Total (7440-43-9)	X			0.002				0.002		5	mg/L		0.002		5
5M. Chromium Total (7440-43-9)	X			0.004				0.003		5	mg/L		0.002		5
6M. Copper Total (7550-50-8)	X			0.144				0.013		5	mg/L		0.005		5
7M. Lead Total (7439-92-1)	X			0.028				0.012		5	mg/L		0.006		5
8M. Mercury Total (7439-97-6)	X			0.005				0.00006		5	mg/L		0.0006		5
9M. Nickel, Total (7440-02-0)	X			0.023				0.016		5	mg/L		0.004		5
10M. Selenium, Total (7782-49-2)	X			0.036				0.031		5	mg/L		0.015		5
11M. Silver, Total (7440-28-0)	X			BDL				BDL		5	mg/L		BDL		5

Part C – Continued

1. POLLUTANT And CAS NO. (if available)	2. MARK "X"			3. EFFLUENT							4. UNITS		5. INTAKE (optional)		
	a. Testing Required	a. Believed Present	b. Believed Absent	a. Maximum Daily Value		b. Maximum 30-Day Value (if available)		c. Long-Term Avg. Value (if available)		d. No. of Analyses	a. Concentration	b. Mass	a. Long-Term Avg Value		b. No. of Analyses
				(1) Concentration	(2) Mass	(1) Concentration	(2) Mass	(1) Concentration	(2) Mass				(1) Concentration	(2) Mass	
METALS, CYANIDE AND TOTAL PHENOLS (Continued)															
12M. Thallium, Total (7440-28-0)	X			0.03				0.017		5	mg/L		0.015		5
13M. Zinc, Total (7440-66-6)	X			0.061				0.025		5	mg/L		0.01		5
14M. Cyanide, Total (57-12-5)	X			BDL						1	mg/L		BDL		1
15M. Phenols, Total	X			BDL						1	mg/L		0.05		1
DIOXIN															
2,3,7,8 Tetra-chlorodibenzo, P, Dioxin (1784-01-6)			X	DESCRIBE RESULTS:											
GC/MS FRACTION – VOLATILE COMPOUNDS															
1V. Acrolein (107-02-8)	X			BDL						1	mg/L		BDL		1
2V. Acrylonitrile (107-13-1)	X			BDL						1	mg/L		BDL		1
3V. Benzene (71-43-2)	X			BDL						1	mg/L		BDL		1
5V. Bromoform (75-25-2)	X			BDL						1	mg/L		BDL		1
6V. Carbon Tetrachloride (56-23-5)	X			BDL						1	mg/L		BDL		1
7V. Chloro-benzene (108-90-7)	X			BDL						1	mg/L		BDL		1
8V. Chlorodibro-momethane (124-48-1)	X			BDL						1	mg/L		BDL		1

Part C – Continued

1. POLLUTANT And CAS NO. (if available)	2. MARK "X"			3. EFFLUENT							4. UNITS		5. INTAKE (optional)		
	a. Testing Required	a. Believed Present	b. Believed Absent	a. Maximum Daily Value		b. Maximum 30-Day Value (if available)		c. Long-Term Avg. Value (if available)		d. No. of Analyses	a. Concentration	b. Mass	a. Long-Term Avg Value		b. No. of Analyses
				(1) Concentration	(2) Mass	(1) Concentration	(2) Mass	(1) Concentration	(2) Mass				(1) Concentration	(2) Mass	
9V. Chloroethane (74-00-3)	X			BDL						1	mg/L		BDL		1
10V. 2-Chloro-ethylvinyl Ether (110-75-8)	X			BDL						1	mg/L		BDL		1
11V. Chloroform (67-66-3)	X			BDL						1	mg/L		BDL		1
12V. Dichloro-bromomethane (75-71-8)	X			BDL						1	mg/L		BDL		1
14V. 1,1-Dichloroethane (75-34-3)	X			BDL						1	mg/L		BDL		1
15V. 1,2-Dichloroethane (107-06-2)	X			BDL						1	mg/L		BDL		1
16V. 1,1-Dichlorethylene (75-35-4)	X			BDL						1	mg/L		BDL		1
17V. 1,2-Di-chloropropane (78-87-5)	X			BDL						1	mg/L		BDL		1
18V. 1,3-Dichloropro-pylene (452-75-6)	X			BDL						1	mg/L		BDL		1
19V. Ethyl-benzene (100-41-4)	X			BDL						1	mg/L		BDL		1
20V. Methyl Bromide (74-83-9)	X			BDL						1	mg/L		BDL		1

Part C – Continued

1. POLLUTANT And CAS NO. (if available)	2. MARK "X"			3. EFFLUENT							4. UNITS		5. INTAKE (optional)		
	a. Testing Required	a. Believed Present	b. Believed Absent	a. Maximum Daily Value		b. Maximum 30-Day Value (if available)		c. Long-Term Avg. Value (if available)		d. No. of Analyses	a. Concentration	b. Mass	a. Long-Term Avg. Value		b. No. of Analyses
				(1) Concentration	(2) Mass	(1) Concentration	(2) Mass	(1) Concentration	(2) Mass				(1) Concentration	(2) Mass	
21V. Methyl Chloride (74-87-3)	X			BDL						1	mg/L		BDL		1
22V. Methylene Chloride (75-00-2)	X			BDL						1	mg/L		BDL		1
23V. 1,1,2,2-Tetrachloro-ethane (79-34-5)	X			BDL						1	mg/L		BDL		1
24V. Tetrachloro-ethylene (127-18-4)	X			BDL						1	mg/L		BDL		1
25V. Toluene (108-88-3)	X			BDL						1	mg/L		BDL		1
26V. 1,2-Trans-Dichloro-ethylene (156-60-5)	X			BDL						1	mg/L		BDL		1
27V. 1,1,1-Tri-chloroethane (71-55-6)	X			BDL						1	mg/L		BDL		1
28V. 1,1,2-Tri-chloroethane (79-00-5)	X			BDL						1	mg/L		BDL		1
29V. Trichloro-ethylene (79-01-6)	X			BDL						1	mg/L		BDL		1
30V. Vinyl Chloride (75-01-4)	X			BDL						1	mg/L		BDL		1

Part C – Continued

1. POLLUTANT And CAS NO. (if available)	2. MARK "X"			3. EFFLUENT							4. UNITS		5. INTAKE (optional)		
	a. Testing Required	a. Believed Present	b. Believed Absent	a. Maximum Daily Value		b. Maximum 30-Day Value (if available)		c. Long-Term Avg. Value (if available)		d. No. of Analyses	a. Concentration	b. Mass	a. Long-Term Avg Value		b. No. of Analyses
				(1) Concentration	(2) Mass	(1) Concentration	(2) Mass	(1) Concentration	(2) Mass				(1) Concentration	(2) Mass	
GC/MS FRACTION – ACID COMPOUNDS															
1A. 2-Chloro-phenol (95-57-8)	X			BDL						1	mg/L		BDL		1
2A. 2,4-Dichlor-Orophenol (120-83-2)	X			BDL						1	mg/L		BDL		1
3A. 2,4-Dimeth-ylphenol (105-67-9)	X			BDL						1	mg/L		BDL		1
4A. 4,6-Dinitro-o-cresol (534-52-1)	X			BDL						1	mg/L		BDL		1
5A. 2,4-Dinitro-phenol (51-28-5)	X			BDL						1	mg/L		BDL		1
6A. 2-Nitro-phenol (88-75-5)	X			BDL						1	mg/L		BDL		1
7A. 4-Nitro-phenol (100-02-7)	X			BDL						1	mg/L		BDL		1
8A. P-chloro-m-cresol (59-50-7)	X			BDL						1	mg/L		BDL		1
9A. Pentachloro-phenol (87-88-5)	X			BDL						1	mg/L		BDL		1
10A. Phenol (108-05-2)	X			BDL						1	mg/L		BDL		1
11A. 2,4,6-Tri-chlorophenol (88-06-2)	X			BDL						1	mg/L		BDL		1
GC/MS FRACTION – BASE/NEUTRAL COMPOUNDS															
1B. Acena-phthene (83-32-9)	X			BDL						1	mg/L		BDL		1

Part C – Continued

1. POLLUTANT And CAS NO. (if available)	2. MARK "X"			3. EFFLUENT							4. UNITS		5. INTAKE (optional)		
	a. Testing Required	a. Believed Present	b. Believed Absent	a. Maximum Daily Value		b. Maximum 30-Day Value (if available)		c. Long-Term Avg. Value (if available)		d. No. of Analyses	a. Concentration	b. Mass	a. Long-Term Avg Value		b. No. of Analyses
				(1) Concentration	(2) Mass	(1) Concentration	(2) Mass	(1) Concentration	(2) Mass				(1) Concentration	(2) Mass	
GC/MS FRACTION – BASE/NEUTRAL COMPOUNDS (Continued)															
2B. Acenaphtylene (208-96-8)	X			BDL						1	mg/L		BDL		1
3B. Anthracene (120-12-7)	X			BDL						1	mg/L		BDL		1
4B. Benzidine (92-87-5)	X			BDL						1	mg/L		BDL		1
5B. Benzo(a)-anthracene (56-55-3)	X			BDL						1	mg/L		BDL		1
6B. Benzo(a)-pyrene (50-32-8)	X			BDL						1	mg/L		BDL		1
7B. 3,4-Benzo-fluoranthene (205-99-2)	X			BDL						1	mg/L		BDL		1
8B. Benzo(ghl) perylene (191-24-2)	X			BDL						1	mg/L		BDL		1
9B. Benzo(k)-fluoranthene (207-08-9)	X			BDL						1	mg/L		BDL		1
10B. Bis(2-chlor-oethoxy)-methane (111-91-1)	X			BDL						1	mg/L		BDL		1
11B. Bis (2-chlor-oisopropyl)-Ether	X			BDL						1	mg/L		BDL		1
12B. Bis (2-ethyl-hexyl)-phthalate (117-81-7)	X			BDL						1	mg/L		BDL		1

Part C – Continued															
1. POLLUTANT And CAS NO. (if available)	2. MARK "X"			3. EFFLUENT							4. UNITS		5. INTAKE (optional)		
	a. Testing Required	a. Believed Present	b. Believed Absent	a. Maximum Daily Value		b. Maximum 30-Day Value (if available)		c. Long-Term Avg. Value (if available)		d. No. of Analyses	a. Concentration	b. Mass	a. Long-Term Avg Value		b. No. of Analyses
				(1) Concentration	(2) Mass	(1) Concentration	(2) Mass	(1) Concentration	(2) Mass				(1) Concentration	(2) Mass	
GC/MS FRACTION – BASE/NEUTRAL COMPOUNDS (Continued)															
13B. 4-Bromo-phenyl Phenyl ether (101-55-3)	X			BDL						1	mg/L		BDL		1
14B. Butyl-benzyl phthalate (85-68-7)	X			BDL						1	mg/L		BDL		1
15B. 2-Chloro-naphthalene (7005-72-3)	X			BDL						1	mg/L		BDL		1
16B. 4-Chloro-phenyl phenyl ether (7005-72-3)	X			BDL						1	mg/L		BDL		1
17B. Chrysene (218-01-9)	X			BDL						1	mg/L		BDL		1
18B. Dibenzo-(a,h) Anthracene (53-70-3)	X			BDL						1	mg/L		BDL		1
19B. 1,2-Dichloro-benzene (95-50-1)	X			BDL						1	mg/L		BDL		1
20B. 1,3-Dichloro-Benzene (541-73-1)	X			BDL						1	mg/L		BDL		1
21B. 1,4-Dichloro-benzene (106-46-7)	X			BDL						1	mg/L		BDL		1
22B. 3,3-Dichloro-benzidene (91-94-1)	X			BDL						1	mg/L		BDL		1
23B. Diethyl Phthalate (84-66-2)	X			BDL						1	mg/L		BDL		1

Part C – Continued

1. POLLUTANT And CAS NO. (if available)	2. MARK "X"			3. EFFLUENT							4. UNITS		5. INTAKE (optional)		
	a. Testing Required	a. Believed Present	b. Believed Absent	a. Maximum Daily Value		b. Maximum 30-Day Value (if available)		c. Long-Term Avg. Value (if available)		d. No. of Analyses	a. Concentration	b. Mass	a. Long-Term Avg. Value		b. No. of Analyses
				(1) Concentration	(2) Mass	(1) Concentration	(2) Mass	(1) Concentration	(2) Mass				(1) Concentration	(2) Mass	
GC/MS FRACTION – BASE/NEUTRAL COMPOUNDS (Continued)															
24B. Dimethyl Phthalate (131-11-3)	X			BDL						1	mg/L		BDL		1
25B. Di-N-butyl Phthalate (84-74-2)	X			BDL						1	mg/L		BDL		1
26B. 2,4-Dinitro-toluene (121-14-2)	X			BDL						1	mg/L		BDL		1
27B. 2,6-Dinitro-toluene (606-20-2)	X			BDL						1	mg/L		BDL		1
28B. Di-n-octyl Phthalate (117-84-0)	X			BDL						1	mg/L		BDL		1
29B. 1,2-diphenyl-hydrazine (as azonbenzene) (122-66-7)	X			BDL						1	mg/L		BDL		1
30B. Fluoranthene (208-44-0)	X			BDL						1	mg/L		BDL		1
31B. Fluorene (86-73-7)	X			BDL						1	mg/L		BDL		1
32B. Hexachloro-benzene (118-71-1)	X			BDL						1	mg/L		BDL		1
33B. Hexachloro-butadiene (87-68-3)	X			BDL						1	mg/L		BDL		1
34B. Hexachloro-cyclopenta-diene (77-47-4)	X			BDL						1	mg/L		BDL		1

Part C – Continued

1. POLLUTANT And CAS NO. (if available)	2. MARK "X"			3. EFFLUENT							4. UNITS		5. INTAKE (optional)		
	a. Testing Required	a. Believed Present	b. Believed Absent	a. Maximum Daily Value		b. Maximum 30-Day Value (if available)		c. Long-Term Avg. Value (if available)		d. No. of Analyses	a. Concentration	b. Mass	a. Long-Term Avg Value		b. No. of Analyses
				(1) Concentration	(2) Mass	(1) Concentration	(2) Mass	(1) Concentration	(2) Mass				(1) Concentration	(2) Mass	
GC/MS FRACTION – BASE/NEUTRAL COMPOUNDS (Continued)															
35B. Hexachloroethane (67-72-1)	X			BDL						1	mg/L		BDL		1
36B. Indneo-(1,2,3-oc)-Pyrene (193-39-5)	X			BDL						1	mg/L		BDL		1
37B. Isophorone (78-59-1)	X			BDL						1	mg/L		BDL		1
38B. Napthalene (91-20-3)	X			BDL						1	mg/L		BDL		1
39B. Nitrobenzene (98-95-3)	X			BDL						1	mg/L		BDL		1
40B. N-Nitrosodimethylamine (62-75-9)	X			BDL						1	mg/L		BDL		1
41B. N-nitrosodi-n-propylamine (621-64-7)	X			BDL						1	mg/L		BDL		1
42B. N-nitrosodiphenylamine (86-30-6)	X			BDL						1	mg/L		BDL		1
43B. Phenanthrene (85-01-8)	X			BDL						1	mg/L		BDL		1
44B. Pyrene (129-00-0)	X			BDL						1	mg/L		BDL		1
45B. 1,2,4 Trichlorobenzene (120-82-1)	X			BDL						1	mg/L		BDL		1

Part C – Continued

1. POLLUTANT And CAS NO. (if available)	2. MARK "X"			3. EFFLUENT							4. UNITS		5. INTAKE (optional)		
	a. Testing Required	a. Believed Present	b. Believed Absent	a. Maximum Daily Value		b. Maximum 30-Day Value (if available)		c. Long-Term Avg. Value (if available)		d. No. of Analyses	a. Concentration	b. Mass	a. Long-Term Avg. Value		b. No. of Analyses
				(1) Concentration	(2) Mass	(1) Concentration	(2) Mass	(1) Concentration	(2) Mass				(1) Concentration	(2) Mass	
GC/MS FRACTION – PESTICIDES															
1P. Aldrin (309-00-2)			X												
2P. α-BHC (319-84-6)			X												
3P. β-BHC (58-89-9)			X												
4P. gamma-BHC (58-89-9)			X												
5P. δ-BHC (319-86-8)			X												
6P. Chlordane (57-74-9)			X												
7P. 4,4'-DDT (50-29-3)			X												
8P. 4,4'-DDE (72-55-9)			X												
9P. 4,4'-DDD (72-54-8)			X												
10P. Dieldrin (60-57-1)			X												
11P. α-Endosulfan (115-29-7)			X												
12P. β-Endosulfan (115-29-7)			X												
13P. Endosulfan Sulfate (1031-07-8)			X												
14P. Endrin (72-20-8)			X												

Part C – Continued

1. POLLUTANT And CAS NO. (if available)	2. MARK "X"			3. EFFLUENT							4. UNITS		5. INTAKE (optional)		
	a. Testing Required	a. Believed Present	b. Believed Absent	a. Maximum Daily Value		b. Maximum 30-Day Value (if available)		c. Long-Term Avg. Value (if available)		d. No. of Analyses	a. Concentration	b. Mass	a. Long-Term Avg Value		b. No. of Analyses
				(1) Concentration	(2) Mass	(1) Concentration	(2) Mass	(1) Concentration	(2) Mass				(1) Concentration	(2) Mass	
GC/MS FRACTION – PESTICIDES															
15P. Endrin Aldehyde (7421-93-4)			X												
16P Heptachlor (76-44-8)			X												
17P. Heptaclor Epoxide (1024-57-3)			X												
18P. PCB-1242 (53469-21-9)			X												
19P. PCB-1254 (11097-69-1)			X												
20P. PCB-1221 (11104-28-2)			X												
21P. PCB-1232 (11141-16-5)			X												
22P. PCB-1248 (12672-29-6)			X												
23P. PCB-1260 (11096-82-5)			X												
24P. PCB-1016 (12674-11-2)			X												
25P. Toxaphene (8001-35-2)			X												

PLEASE PRINT OR TYPE IN THE UNSHADED AREAS ONLY. You may report some or all of this information on separate sheets (use the same format) instead of completing these pages. (See instructions)

EWB – Units 1 & 2 Cooling Tower Blowdown

V. INTAKE AND EFFLUENT CHARACTERISTICS (Continued from page 3 of Form C) | **OUTFALL NO. 002**

Part A – You must provide the results of at least one analysis for every pollutant in this table. Complete one table for each outfall. See instructions for additional details.

1. POLLUTANT	2. EFFLUENT							3. UNITS (specify if blank)		4. INTAKE (optional)		
	a. Maximum Daily Value		b. Maximum 30-Day Value (if available)		c. Long-Term Avg. Value (if available)		d. No. of Analyses	a. Concentration	b. Mass	a. Long-Term Avg. Value		b. No of Analyses
	(1) Concentration	(2) Mass	(1) Concentration	(2) Mass	(1) Concentration	(2) Mass				(1) Concentration	(2) Mass	
a. Biochemical Oxygen Demand (BOD)	BDL						1	mg/L				
b. Chemical Oxygen Demand (COD)	1.53						1	mg/L				
c. Total Organic Carbon (TOC)	4.6						1	mg/L				
d. Total Suspended Solids (TSS)	BDL						1	mg/L				
e. Ammonia (as N)	BDL						1	mg/L				
f. Flow (in units of MGD)	VALUE 2.88		VALUE		VALUE 1.33		53	MGD		VALUE		
g. Temperature (winter)	VALUE		VALUE		VALUE			°c		VALUE		
h. Temperature (summer)	VALUE 38.0		VALUE		VALUE 30.6		53	°c		VALUE		
i. pH	MINIMUM 8.4	MAXIMUM 8.8	MINIMUM	MAXIMUM			53	STANDARD UNITS				

Part B - In the MARK "X" column, place an "X" in the Believed Present column for each pollutant you know or have reason to believe is present. Place an "X" in the Believed Absent column for each pollutant you believe to be absent. If you mark the Believed Present column for any pollutant, you must provide the results of at least one analysis for that pollutant. Complete one table for each outfall. See the instructions for additional details and requirements.

1. POLLUTANT AND CAS NO. (if available)	2. MARK "X"		3. EFFLUENT							4. UNITS		6. INTAKE (optional)		
	a. Believed Present	b. Believed Absent	a. Maximum Daily Value		b. Maximum 30-Day Value (if available)		c. Long-Term Avg. Value (if available)		d. No. of Analyses	a. Concentration	b. Mass	a. Long-Term Avg Value		b. No. of Analyses
			(1) Concentration	(2) Mass	(1) Concentration	(2) Mass	(1) Concentration	(2) Mass				(1) Concentration	(2) Mass	
a. Bromide (24959-67-9)	X		BDL						1	mg/L				
b. Bromine Total Residual	X		*						*	mg/L				
c. Chloride	X		14						1	mg/L				
d. Chlorine, Total Residual	X		0.03						1	mg/L				
e. Color	X		28						1	ADMI				
f. Fecal Coliform	X		BDL						1	C/100 ml				
g. Fluoride (16984-48-8)	X		0.56						1	mg/L				
h. Hardness (as $CaCO_3$)	X		244						1	mg/L				
i. Nitrate – Nitrite (as N)	X		1.5						1	mg/L				
j. Nitrogen, Total Organic (as N)	X		0.4						1	mg/L				
k. Oil and Grease	X		BDL						1	mg/L				
l. Phosphorous (as P), Total 7723-14-0	X		0.34						1	mg/L as P				
m. Radioactivity														
(1) Alpha, Total		X								mg/L				
(2) Beta, Total		X								mg/L				
(3) Radium Total		X								mg/L				
(4) Radium, 226, Total		X								mg/L				

* Total Residual Chlorine analysis reflects all oxidants present (per KPDES permit), no standard Total Residual Bromine analysis method currently exists

Part B – Continued

1. POLLUTANT And CAS NO. (if available)	2. MARK "X"		3. EFFLUENT							4. UNITS		5. INTAKE (optional)		
	a. Believed Present	b. Believed Absent	a. Maximum Daily Value		b. Maximum 30-Day Value (if available)		c. Long-Term Avg. Value (if available)		d. No. of Analyses	a. Concentration	b. Mass	a. Long-Term Avg. Value		b. No. of Analyses
			(1) Concentration	(2) Mass	(1) Concentration	(2) Mass	(1) Concentration	(2) Mass				(1) Concentration	(2) Mass	
n. Sulfate (as SO_4) (14808-79-8)	X		83						1	mg/L				
o. Sulfide (as S)	X		0.3						1	mg/L				
p. Sulfite (as SO_4) (14286-46-3)	X		2						1	mg/L				
q. Surfactants	X		BDL						1	mg/L MBAS				
r. Aluminum, Total (7429-90)	X		BDL						1	mg/L				
s. Barium, Total (7440-39-3)	X		0.05						1	mg/L				
t. Boron, Total (7440-42-8)	X		BDL						1	mg/L				
u. Cobalt, Total (7440-48-4)	X		BDL						1	mg/L				
v. Iron, Total (7439-89-6)	X		BDL						1	mg/L				
w. Magnesium Total (7439-96-4)	X		14.2						1	mg/L				
x. Molybdenum Total (7439-98-7)	X		BDL						1	mg/L				
y. Manganese, Total (7439-96-6)	X		BDL						1	mg/L				
z. Tin, Total (7440-31-5)	X		BDL						1	mg/L				
aa. Titanium, Total (7440-32-6)	X		BDL						1	mg/L				

Part C – If you are a primary industry and this outfall contains process wastewater, refer to Table C-2 in the instructions to determine which of the GC/MS fractions you must test for. Mark "X" in the **Testing Required** column for all such GC/MS fractions that apply to your industry and for ALL toxic metals, cyanides, and total phenols. If you are not required to mark this column (secondary industries, nonprocess wastewater outfalls, and non-required GC/MS fractions), mark "X" in the **Believed Present** column for each pollutant you know or have reason to believe is present. Mark "X: in the **Believed Absent** column for each pollutant you believe to be absent. If you mark either the **Testing Required** or **Believed Present** columns for any pollutant, you must provide the result of at least one analysis for that pollutant. Note that there are seven pages to this part; please review each carefully. Complete one table (all seven pages) for each outfall. See instructions for additional details and requirements.

1. POLLUTANT And CAS NO. (if available)	2. MARK "X"			3. EFFLUENT							4. UNITS		5. INTAKE (optional)		
	a. Testing Required	a. Believed Present	b. Believed Absent	a. Maximum Daily Value		b. Maximum 30-Day Value (if available)		c. Long-Term Avg. Value (if available)		d. No. of Analyses	a. Concentration	b. Mass	a. Long-Term Avg Value		b. No. of Analyses
				(1) Concentration	(2) Mass	(1) Concentration	(2) Mass	(1) Concentration	(2) Mass				(1) Concentration	(2) Mass	
METALS, CYANIDE AND TOTAL PHENOLS															
1M. Antimony Total (7440-36-0)	X			BDL						1	mg/L				
2M. Arsenic, Total (7440-38-2)	X			BDL						1	mg/L				
3M. Beryllium Total (7440-41-7)	X			BDL						1	mg/L				
4M. Cadmium Total (7440-43-9)	X			BDL						1	mg/L				
5M. Chromium Total (7440-43-9)	X			BDL						1	mg/L				
6M. Copper Total (7550-50-8)	X			0.04						1	mg/L				
7M. Lead Total (7439-92-1)	X			BDL						1	mg/L				
8M. Mercury Total (7439-97-6)	X			0.0012						1	mg/L				
9M. Nickel, Total (7440-02-0)	X			BDL						1	mg/L				
10M. Selenium, Total (7782-49-2)	X			BDL						1	mg/L				
11M. Silver, Total (7440-28-0)	X			BDL						1	mg/L				

Part C – Continued

1. POLLUTANT And CAS NO. (if available)	2. MARK "X"			3. EFFLUENT							4. UNITS		5. INTAKE (optional)		
	a. Testing Required	a. Believed Present	b. Believed Absent	a. Maximum Daily Value		b. Maximum 30-Day Value (if available)		c. Long-Term Avg. Value (if available)		d. No. of Analyses	a. Concentration	b. Mass	a. Long-Term Avg Value		b. No. of Analyses
				(1) Concentration	(2) Mass	(1) Concentration	(2) Mass	(1) Concentration	(2) Mass				(1) Concentration	(2) Mass	
METALS, CYANIDE AND TOTAL PHENOLS (Continued)															
12M. Thallium, Total (7440-28-0)	X			BDL						1	mg/L				
13M. Zinc, Total (7440-66-6)	X			BDL						1	mg/L				
14M. Cyanide, Total (57-12-5)	X			BDL						1	mg/L				
15M. Phenols, Total	X			0.05						1	mg/L				
DIOXIN															
2,3,7,8 Tetra-chlorodibenzo, P, Dioxin (1784-01-6)			X	DESCRIBE RESULTS:											
GC/MS FRACTION – VOLATILE COMPOUNDS															
1V. Acrolein (107-02-8)	X			BDL						1	mg/L				
2V. Acrylonitrile (107-13-1)	X			BDL						1	mg/L				
3V. Benzene (71-43-2)	X			BDL						1	mg/L				
5V. Bromoform (75-25-2)	X			BDL						1	mg/L				
6V. Carbon Tetrachloride (56-23-5)	X			BDL						1	mg/L				
7V. Chloro-benzene (108-90-7)	X			BDL						1	mg/L				
8V. Chlorodibro-momethane (124-48-1)	X			BDL						1	mg/L				

Part C – Continued

1. POLLUTANT And CAS NO. (if available)	2. MARK "X"			3. EFFLUENT							4. UNITS		5. INTAKE (optional)		
	a. Testing Required	a. Believed Present	b. Believed Absent	a. Maximum Daily Value		b. Maximum 30-Day Value (if available)		c. Long-Term Avg. Value (if available)		d. No. of Analyses	a. Concentration	b. Mass	a. Long-Term Avg Value		b. No. of Analyses
				(1) Concentration	(2) Mass	(1) Concentration	(2) Mass	(1) Concentration	(2) Mass				(1) Concentration	(2) Mass	
9V. Chloroethane (74-00-3)	X			BDL						1	mg/L				
10V. 2-Chloro-ethylvinyl Ether (110-75-8)	X			BDL						1	mg/L				
11V. Chloroform (67-66-3)	X			BDL						1	mg/L				
12V. Dichloro-bromomethane (75-71-8)	X			BDL						1	mg/L				
14V. 1,1-Dichloroethane (75-34-3)	X			BDL						1	mg/L				
15V. 1,2-Dichloroethane (107-06-2)	X			BDL						1	mg/L				
16V. 1,1-Dichlorethylene (75-35-4)	X			BDL						1	mg/L				
17V. 1,2-Di-chloropropane (78-87-5)	X			BDL						1	mg/L				
18V. 1,3-Dichloropro-pylene (452-75-6)	X			BDL						1	mg/L				
19V. Ethyl-benzene (100-41-4)	X			BDL						1	mg/L				
20V. Methyl Bromide (74-83-9)	X			BDL						1	mg/L				

Part C – Continued

1. POLLUTANT And CAS NO. (if available)	2. MARK "X"			3. EFFLUENT							4. UNITS		5. INTAKE (optional)		
	a. Testing Required	a. Believed Present	b. Believed Absent	a. Maximum Daily Value		b. Maximum 30-Day Value (if available)		c. Long-Term Avg. Value (if available)		d. No. of Analyses	a. Concentration	b. Mass	a. Long-Term Avg. Value		b. No. of Analyses
				(1) Concentration	(2) Mass	(1) Concentration	(2) Mass	(1) Concentration	(2) Mass				(1) Concentration	(2) Mass	
21V. Methyl Chloride (74-87-3)	X			BDL						1	mg/L				
22V. Methylene Chloride (75-00-2)	X			BDL						1	mg/L				
23V. 1,1,2,2-Tetrachloro-ethane (79-34-5)	X			BDL						1	mg/L				
24V. Tetrachloro-ethylene (127-18-4)	X			BDL						1	mg/L				
25V. Toluene (108-88-3)	X			BDL						1	mg/L				
26V. 1,2-Trans-Dichloro-ethylene (156-60-5)	X			BDL						1	mg/L				
27V. 1,1,1-Tri-chloroethane (71-55-6)	X			BDL						1	mg/L				
28V. 1,1,2-Tri-chloroethane (79-00-5)	X			BDL						1	mg/L				
29V. Trichloro-ethylene (79-01-6)	X			BDL						1	mg/L				
30V. Vinyl Chloride (75-01-4)	X			BDL						1	mg/L				

Part C – Continued

1. POLLUTANT And CAS NO. (if available)	2. MARK "X"			3. EFFLUENT							4. UNITS		5. INTAKE (optional)		
	a. Testing Required	a. Believed Present	b. Believed Absent	a. Maximum Daily Value		b. Maximum 30-Day Value (if available)		c. Long-Term Avg. Value (if available)		d. No. of Analyses	a. Concentration	b. Mass	a. Long-Term Avg Value		b. No. of Analyses
				(1) Concentration	(2) Mass	(1) Concentration	(2) Mass	(1) Concentration	(2) Mass				(1) Concentration	(2) Mass	
GC/MS FRACTION – ACID COMPOUNDS															
1A. 2-Chloro-phenol (95-57-8)	X			BDL						1	mg/L				
2A. 2,4-Dichlor-Orophenol (120-83-2)	X			BDL						1	mg/L				
3A. 2,4-Dimeth-ylphenol (105-67-9)	X			BDL						1	mg/L				
4A. 4,6-Dinitro-o-cresol (534-52-1)	X			BDL						1	mg/L				
5A. 2,4-Dinitro-phenol (51-28-5)	X			BDL						1	mg/L				
6A. 2-Nitro-phenol (88-75-5)	X			BDL						1	mg/L				
7A. 4-Nitro-phenol (100-02-7)	X			BDL						1	mg/L				
8A. P-chloro-m-cresol (59-50-7)	X			BDL						1	mg/L				
9A. Pentachloro-phenol (87-88-5)	X			BDL						1	mg/L				
10A. Phenol (108-05-2)	X			BDL						1	mg/L				
11A. 2,4,6-Tri-chlorophenol (88-06-2)	X			BDL						1	mg/L				
GC/MS FRACTION – BASE/NEUTRAL COMPOUNDS															
1B. Acena-phthene (83-32-9)	X			BDL						1	mg/L				

Part C – Continued															
1. POLLUTANT And CAS NO. (if available)	2. MARK "X"			3. EFFLUENT							4. UNITS		5. INTAKE (optional)		
	a. Testing Required	a. Believed Present	b. Believed Absent	a. Maximum Daily Value		b. Maximum 30-Day Value (if available)		c. Long-Term Avg. Value (if available)		d. No. of Analyses	a. Concentration	b. Mass	a. Long-Term Avg Value		b. No. of Analyses
				(1) Concentration	(2) Mass	(1) Concentration	(2) Mass	(1) Concentration	(2) Mass				(1) Concentration	(2) Mass	
GC/MS FRACTION – BASE/NEUTRAL COMPOUNDS (Continued)															
2B. Acenaphtylene (208-96-8)	X			BDL						1	mg/L				
3B. Anthracene (120-12-7)	X			BDL						1	mg/L				
4B. Benzidine (92-87-5)	X			BDL						1	mg/L				
5B. Benzo(a)-anthracene (56-55-3)	X			BDL						1	mg/L				
6B. Benzo(a)-pyrene (50-32-8)	X			BDL						1	mg/L				
7B. 3,4-Benzo-fluoranthene (205-99-2)	X			BDL						1	mg/L				
8B. Benzo(ghl) perylene (191-24-2)	X			BDL						1	mg/L				
9B. Benzo(k)-fluoranthene (207-08-9)	X			BDL						1	mg/L				
10B. Bis(2-chlor-oethoxy)-methane (111-91-1)	X			BDL						1	mg/L				
11B. Bis (2-chlor-oisopropyl)-Ether	X			BDL						1	mg/L				
12B. Bis (2-ethyl-hexyl)-phthalate (117-81-7)	X			BDL						1	mg/L				

Part C – Continued

1. POLLUTANT And CAS NO. (if available)	2. MARK "X"			3. EFFLUENT							4. UNITS		5. INTAKE (optional)		
	a. Testing Required	a. Believed Present	b. Believed Absent	a. Maximum Daily Value		b. Maximum 30-Day Value (if available)		c. Long-Term Avg. Value (if available)		d. No. of Analyses	a. Concentration	b. Mass	a. Long-Term Avg Value		b. No. of Analyses
				(1) Concentration	(2) Mass	(1) Concentration	(2) Mass	(1) Concentration	(2) Mass				(1) Concentration	(2) Mass	
GC/MS FRACTION – BASE/NEUTRAL COMPOUNDS (Continued)															
13B. 4-Bromo-phenyl Phenyl ether (101-55-3)	X			BDL						1	mg/L				
14B. Butyl-benzyl phthalate (85-68-7)	X			BDL						1	mg/L				
15B. 2-Chloro-naphthalene (7005-72-3)	X			BDL						1	mg/L				
16B. 4-Chloro-phenyl phenyl ether (7005-72-3)	X			BDL						1	mg/L				
17B. Chrysene (218-01-9)	X			BDL						1	mg/L				
18B. Dibenzo-(a,h) Anthracene (53-70-3)	X			BDL						1	mg/L				
19B. 1,2-Dichloro-benzene (95-50-1)	X			BDL						1	mg/L				
20B. 1,3-Dichloro-Benzene (541-73-1)	X			BDL						1	mg/L				
21B. 1,4-Dichloro-benzene (106-46-7)	X			BDL						1	mg/L				
22B. 3,3-Dichloro-benzidene (91-94-1)	X			BDL						1	mg/L				
23B. Diethyl Phthalate (84-66-2)	X			BDL						1	mg/L				

Part C – Continued

1. POLLUTANT And CAS NO. (if available)	2. MARK "X"			3. EFFLUENT							4. UNITS		5. INTAKE (optional)		
	a. Testing Required	a. Believed Present	b. Believed Absent	a. Maximum Daily Value		b. Maximum 30-Day Value (if available)		c. Long-Term Avg. Value (if available)		d. No. of Analyses	a. Concentration	b. Mass	a. Long-Term Avg. Value		b. No. of Analyses
				(1) Concentration	(2) Mass	(1) Concentration	(2) Mass	(1) Concentration	(2) Mass				(1) Concentration	(2) Mass	
GC/MS FRACTION – BASE/NEUTRAL COMPOUNDS (Continued)															
24B. Dimethyl Phthalate (131-11-3)	X			BDL						1	mg/L				
25B. Di-N-butyl Phthalate (84-74-2)	X			BDL						1	mg/L				
26B. 2,4-Dinitro-toluene (121-14-2)	X			BDL						1	mg/L				
27B. 2,6-Dinitro-toluene (606-20-2)	X			BDL						1	mg/L				
28B. Di-n-octyl Phthalate (117-84-0)	X			BDL						1	mg/L				
29B. 1,2-diphenyl-hydrazine (as azonbenzene) (122-66-7)	X			BDL						1	mg/L				
30B. Fluoranthene (208-44-0)	X			BDL						1	mg/L				
31B. Fluorene (86-73-7)	X			BDL						1	mg/L				
32B. Hexachloro-benzene (118-71-1)	X			BDL						1	mg/L				
33B. Hexachloro-butadiene (87-68-3)	X			BDL						1	mg/L				
34B. Hexachloro-cyclopenta-diene (77-47-4)	X			BDL						1	mg/L				

Part C – Continued															
1. POLLUTANT And CAS NO. (if available)	2. MARK "X"			3. EFFLUENT							4. UNITS		5. INTAKE (optional)		
	a. Testing Required	a. Believed Present	b. Believed Absent	a. Maximum Daily Value		b. Maximum 30-Day Value (if available)		c. Long-Term Avg. Value (if available)		d. No. of Analyses	a. Concentration	b. Mass	a. Long-Term Avg Value		b. No. of Analyses
				(1) Concentration	(2) Mass	(1) Concentration	(2) Mass	(1) Concentration	(2) Mass				(1) Concentration	(2) Mass	
GC/MS FRACTION – BASE/NEUTRAL COMPOUNDS (Continued)															
35B. Hexachloroethane (67-72-1)	X			BDL						1	mg/L				
36B. Indneo-(1,2,3-oc)-Pyrene (193-39-5)	X			BDL						1	mg/L				
37B. Isophorone (78-59-1)	X			BDL						1	mg/L				
38B. Napthalene (91-20-3)	X			BDL						1	mg/L				
39B. Nitrobenzene (98-95-3)	X			BDL						1	mg/L				
40B. N-Nitrosodimethylamine (62-75-9)	X			BDL						1	mg/L				
41B. N-nitrosodi-n-propylamine (621-64-7)	X			BDL						1	mg/L				
42B. N-nitrosodiphenylamine (86-30-6)	X			BDL						1	mg/L				
43B. Phenanthrene (85-01-8)	X			BDL						1	mg/L				
44B. Pyrene (129-00-0)	X			BDL						1	mg/L				
45B. 1,2,4 Trichlorobenzene (120-82-1)	X			BDL						1	mg/L				

Part C – Continued

1. POLLUTANT And CAS NO. (if available)	2. MARK "X"			3. EFFLUENT							4. UNITS		5. INTAKE (optional)		
	a. Testing Required	a. Believed Present	b. Believed Absent	a. Maximum Daily Value		b. Maximum 30-Day Value (if available)		c. Long-Term Avg. Value (if available)		d. No. of Analyses	a. Concentration	b. Mass	a. Long-Term Avg. Value		b. No. of Analyses
				(1) Concentration	(2) Mass	(1) Concentration	(2) Mass	(1) Concentration	(2) Mass				(1) Concentration	(2) Mass	
GC/MS FRACTION – PESTICIDES															
1P. Aldrin (309-00-2)			X												
2P. α-BHC (319-84-6)			X												
3P. β-BHC (58-89-9)			X												
4P. gamma-BHC (58-89-9)			X												
5P. δ-BHC (319-86-8)			X												
6P. Chlordane (57-74-9)			X												
7P. 4,4'-DDT (50-29-3)			X												
8P. 4,4'-DDE (72-55-9)			X												
9P. 4,4'-DDD (72-54-8)			X												
10P. Dieldrin (60-57-1)			X												
11P. α-Endosulfan (115-29-7)			X												
12P. β-Endosulfan (115-29-7)			X												
13P. Endosulfan Sulfate (1031-07-8)			X												
14P. Endrin (72-20-8)			X												

Part C – Continued

1. POLLUTANT And CAS NO. (if available)	2. MARK "X"			3. EFFLUENT							4. UNITS		5. INTAKE (optional)		
	a. Testing Required	a. Believed Present	b. Believed Absent	a. Maximum Daily Value		b. Maximum 30-Day Value (if available)		c. Long-Term Avg. Value (if available)		d. No. of Analyses	a. Concentration	b. Mass	a. Long-Term Avg Value		b. No. of Analyses
				(1) Concentration	(2) Mass	(1) Concentration	(2) Mass	(1) Concentration	(2) Mass				(1) Concentration	(2) Mass	
GC/MS FRACTION – PESTICIDES															
15P. Endrin Aldehyde (7421-93-4)			X												
16P Heptachlor (76-44-8)			X												
17P. Heptaclor Epoxide (1024-57-3)			X												
18P. PCB-1242 (53469-21-9)			X												
19P. PCB-1254 (11097-69-1)			X												
20P. PCB-1221 (11104-28-2)			X												
21P. PCB-1232 (11141-16-5)			X												
22P. PCB-1248 (12672-29-6)			X												
23P. PCB-1260 (11096-82-5)			X												
24P. PCB-1016 (12674-11-2)			X												
25P. Toxaphene (8001-35-2)			X												

PLEASE PRINT OR TYPE IN THE UNSHADED AREAS ONLY. You may report some or all of this information on separate sheets (use the same format) instead of completing these pages. (See instructions)

EWB – Unit 3 Cooling Tower Blowdown

V. INTAKE AND EFFLUENT CHARACTERISTICS (Continued from page 3 of Form C) — **OUTFALL NO. 003**

Part A – You must provide the results of at least one analysis for every pollutant in this table. Complete one table for each outfall. See instructions for additional details.

1. POLLUTANT	2. EFFLUENT a. Maximum Daily Value (1) Concentration	a. Maximum Daily Value (2) Mass	b. Maximum 30-Day Value (if available) (1) Concentration	b. Maximum 30-Day Value (if available) (2) Mass	c. Long-Term Avg. Value (if available) (1) Concentration	c. Long-Term Avg. Value (if available) (2) Mass	d. No. of Analyses	3. UNITS (specify if blank) a. Concentration	3. UNITS b. Mass	4. INTAKE (optional) a. Long-Term Avg. Value (1) Concentration	4. INTAKE a. Long-Term Avg. Value (2) Mass	4. INTAKE b. No of Analyses
a. Biochemical Oxygen Demand (BOD)	BDL						1	mg/L				
b. Chemical Oxygen Demand (COD)	1.78						1	mg/L				
c. Total Organic Carbon (TOC)	2.9						1	mg/L				
d. Total Suspended Solids (TSS)	BDL						1	mg/L				
e. Ammonia (as N)	BDL						1	mg/L				
f. Flow (in units of MGD)	VALUE	3.17	VALUE		VALUE	0.58	53	MGD		VALUE		
g. Temperature (winter)	VALUE		VALUE		VALUE	16.6		°c		VALUE		
h. Temperature (summer)	VALUE	39.5	VALUE		VALUE	23.2	53	°c		VALUE		
i. pH	MINIMUM 7.8	MAXIMUM 8.8	MINIMUM	MAXIMUM			53	STANDARD UNITS				

Part B - In the MARK "X" column, place an "X" in the Believed Present column for each pollutant you know or have reason to believe is present. Place an "X" in the Believed Absent column for each pollutant you believe to be absent. If you mark the Believed Present column for any pollutant, you must provide the results of at least one analysis for that pollutant. Complete one table for each outfall. See the instructions for additional details and requirements.

1. POLLUTANT AND CAS NO. (if available)	2. MARK "X" a. Believed Present	2. MARK "X" b. Believed Absent	3. EFFLUENT a. Maximum Daily Value (1) Concentration	a. Maximum Daily Value (2) Mass	b. Maximum 30-Day Value (if available) (1) Concentration	b. Maximum 30-Day Value (2) Mass	c. Long-Term Avg. Value (if available) (1) Concentration	c. Long-Term Avg. Value (2) Mass	d. No. of Analyses	4. UNITS a. Concentration	4. UNITS b. Mass	6. INTAKE (optional) a. Long-Term Avg Value (1) Concentration	a. Long-Term Avg Value (2) Mass	b. No. of Analyses
a. Bromide (24959-67-9)	X		BDL						1	mg/L				
b. Bromine Total Residual	X		*						*	mg/L				
c. Chloride	X		8.4						1	mg/L				
d. Chlorine, Total Residual	X		0.02						1	mg/L				
e. Color	X		13						1	ADMI				
f. Fecal Coliform	X		BDL						1	C//100 ml				
g. Fluoride (16984-48-8)	X		BDL						1	mg/L				
h. Hardness (as $CaCO_3$)	X		140						1	mg/L				
i. Nitrate – Nitrite (as N)	X		0.9						1	mg/L				
j. Nitrogen, Total Organic (as N)	X		0.23						1	mg/L				
k. Oil and Grease	X		BDL						1	mg/L				
l. Phosphorous (as P), Total 7723-14-0	X		0.052						1	mg/L as P				
m. Radioactivity														
(1) Alpha, Total		X								mg/L				
(2) Beta, Total		X								mg/L				
(3) Radium Total		X								mg/L				
(4) Radium, 226, Total		X								mg/L				

* Total Residual Chlorine analysis reflects all oxidants present (per KPDES permit), no standard Total Residual Bromine analysis method currently exists

Part B – Continued

1. POLLUTANT And CAS NO. (if available)	2. MARK "X"		3. EFFLUENT							4. UNITS		5. INTAKE (optional)		
	a. Believed Present	b. Believed Absent	a. Maximum Daily Value		b. Maximum 30-Day Value (if available)		c. Long-Term Avg. Value (if available)		d. No. of Analyses	a. Concentration	b. Mass	a. Long-Term Avg. Value		b. No. of Analyses
			(1) Concentration	(2) Mass	(1) Concentration	(2) Mass	(1) Concentration	(2) Mass				(1) Concentration	(2) Mass	
n. Sulfate (as SO_4) (14808-79-8)	X		64						1	mg/L				
o. Sulfide (as S)	X		BDL						1	mg/L				
p. Sulfite (as SO_4) (14286-46-3)	X		BDL						1	mg/L				
q. Surfactants	X		BDL						1	mg/L MBAS				
r. Aluminum, Total (7429-90)	X		BDL						1	mg/L				
s. Barium, Total (7440-39-3)	X		0.03						1	mg/L				
t. Boron, Total (7440-42-8)	X		BDL						1	mg/L				
u. Cobalt, Total (7440-48-4)	X		BDL						1	mg/L				
v. Iron, Total (7439-89-6)	X		BDL						1	mg/L				
w. Magnesium Total (7439-96-4)	X		8.1						1	mg/L				
x. Molybdenum Total (7439-98-7)	X		0.14						1	mg/L				
y. Manganese, Total (7439-96-6)	X		BDL						1	mg/L				
z. Tin, Total (7440-31-5)	X		BDL						1	mg/L				
aa. Titanium, Total (7440-32-6)	X		BDL						1	mg/L				

Part C – If you are a primary industry and this outfall contains process wastewater, refer to Table C-2 in the instructions to determine which of the GC/MS fractions you must test for. Mark "X" in the **Testing Required** column for all such GC/MS fractions that apply to your industry and for ALL toxic metals, cyanides, and total phenols. If you are not required to mark this column (secondary industries, nonprocess wastewater outfalls, and non-required GC/MS fractions), mark "X" in the **Believed Present** column for each pollutant you know or have reason to believe is present. Mark "X: in the **Believed Absent** column for each pollutant you believe to be absent. If you mark either the **Testing Required** or **Believed Present** columns for any pollutant, you must provide the result of at least one analysis for that pollutant. Note that there are seven pages to this part; please review each carefully. Complete one table (all seven pages) for each outfall. See instructions for additional details and requirements.

1. POLLUTANT And CAS NO. (if available)	2. MARK "X"			3. EFFLUENT							4. UNITS		5. INTAKE (optional)		
	a. Testing Required	a. Believed Present	b. Believed Absent	a. Maximum Daily Value		b. Maximum 30-Day Value (if available)		c. Long-Term Avg. Value (if available)		d. No. of Analyses	a. Concentration	b. Mass	a. Long-Term Avg Value		b. No. of Analyses
				(1) Concentration	(2) Mass	(1) Concentration	(2) Mass	(1) Concentration	(2) Mass				(1) Concentration	(2) Mass	
METALS, CYANIDE AND TOTAL PHENOLS															
1M. Antimony Total (7440-36-0)	X			0.02						1	mg/L				
2M. Arsenic, Total (7440-38-2)	X			BDL						1	mg/L				
3M. Beryllium Total (7440-41-7)	X			BDL						1	mg/L				
4M. Cadmium Total (7440-43-9)	X			BDL						1	mg/L				
5M. Chromium Total (7440-43-9)	X			BDL						1	mg/L				
6M. Copper Total (7550-50-8)	X			BDL						1	mg/L				
7M. Lead Total (7439-92-1)	X			BDL						1	mg/L				
8M. Mercury Total (7439-97-6)	X			BDL						1	mg/L				
9M. Nickel, Total (7440-02-0)	X			BDL						1	mg/L				
10M. Selenium, Total (7782-49-2)	X			BDL						1	mg/L				
11M. Silver, Total (7440-28-0)	X			BDL						1	mg/L				

Part C – Continued

1. POLLUTANT And CAS NO. (if available)	2. MARK "X"			3. EFFLUENT							4. UNITS		5. INTAKE (optional)		
	a. Testing Required	a. Believed Present	b. Believed Absent	a. Maximum Daily Value		b. Maximum 30-Day Value (if available)		c. Long-Term Avg. Value (if available)		d. No. of Analyses	a. Concentration	b. Mass	a. Long-Term Avg Value		b. No. of Analyses
				(1) Concentration	(2) Mass	(1) Concentration	(2) Mass	(1) Concentration	(2) Mass				(1) Concentration	(2) Mass	
METALS, CYANIDE AND TOTAL PHENOLS (Continued)															
12M. Thallium, Total (7440-28-0)	X			BDL						1	mg/L				
13M. Zinc, Total (7440-66-6)	X			BDL						1	mg/L				
14M. Cyanide, Total (57-12-5)	X			BDL						1	mg/L				
15M. Phenols, Total	X			0.05						1	mg/L				
DIOXIN															
2,3,7,8 Tetra-chlorodibenzo, P, Dioxin (1784-01-6)			X	DESCRIBE RESULTS:											
GC/MS FRACTION – VOLATILE COMPOUNDS															
1V. Acrolein (107-02-8)	X			BDL						1	mg/L				
2V. Acrylonitrile (107-13-1)	X			BDL						1	mg/L				
3V. Benzene (71-43-2)	X			BDL						1	mg/L				
5V. Bromoform (75-25-2)	X			BDL						1	mg/L				
6V. Carbon Tetrachloride (56-23-5)	X			BDL						1	mg/L				
7V. Chloro-benzene (108-90-7)	X			BDL						1	mg/L				
8V. Chlorodibro-momethane (124-48-1)	X			BDL						1	mg/L				

Part C – Continued

1. POLLUTANT And CAS NO. (if available)	2. MARK "X"			3. EFFLUENT							4. UNITS		5. INTAKE (optional)		
	a. Testing Required	a. Believed Present	b. Believed Absent	a. Maximum Daily Value		b. Maximum 30-Day Value (if available)		c. Long-Term Avg. Value (if available)		d. No. of Analyses	a. Concentration	b. Mass	a. Long-Term Avg Value		b. No. of Analyses
				(1) Concentration	(2) Mass	(1) Concentration	(2) Mass	(1) Concentration	(2) Mass				(1) Concentration	(2) Mass	
9V. Chloroethane (74-00-3)	X			BDL						1	mg/L				
10V. 2-Chloro-ethylvinyl Ether (110-75-8)	X			BDL						1	mg/L				
11V. Chloroform (67-66-3)	X			BDL						1	mg/L				
12V. Dichloro-bromomethane (75-71-8)	X			BDL						1	mg/L				
14V. 1,1-Dichloroethane (75-34-3)	X			BDL						1	mg/L				
15V. 1,2-Dichloroethane (107-06-2)	X			BDL						1	mg/L				
16V. 1,1-Dichlorethylene (75-35-4)	X			BDL						1	mg/L				
17V. 1,2-Di-chloropropane (78-87-5)	X			BDL						1	mg/L				
18V. 1,3-Dichloropro-pylene (452-75-6)	X			BDL						1	mg/L				
19V. Ethyl-benzene (100-41-4)	X			BDL						1	mg/L				
20V. Methyl Bromide (74-83-9)	X			BDL						1	mg/L				

Part C – Continued

1. POLLUTANT And CAS NO. (if available)	2. MARK "X"			3. EFFLUENT							4. UNITS		5. INTAKE (optional)		
	a. Testing Required	a. Believed Present	b. Believed Absent	a. Maximum Daily Value		b. Maximum 30-Day Value (if available)		c. Long-Term Avg. Value (if available)		d. No. of Analyses	a. Concentration	b. Mass	a. Long-Term Avg. Value		b. No. of Analyses
				(1) Concentration	(2) Mass	(1) Concentration	(2) Mass	(1) Concentration	(2) Mass				(1) Concentration	(2) Mass	
21V. Methyl Chloride (74-87-3)	X			BDL						1	mg/L				
22V. Methylene Chloride (75-00-2)	X			BDL						1	mg/L				
23V. 1,1,2,2-Tetrachloro-ethane (79-34-5)	X			BDL						1	mg/L				
24V. Tetrachloro-ethylene (127-18-4)	X			BDL						1	mg/L				
25V. Toluene (108-88-3)	X			BDL						1	mg/L				
26V. 1,2-Trans-Dichloro-ethylene (156-60-5)	X			BDL						1	mg/L				
27V. 1,1,1-Tri-chloroethane (71-55-6)	X			BDL						1	mg/L				
28V. 1,1,2-Tri-chloroethane (79-00-5)	X			BDL						1	mg/L				
29V. Trichloro-ethylene (79-01-6)	X			BDL						1	mg/L				
30V. Vinyl Chloride (75-01-4)	X			BDL						1	mg/L				

Part C – Continued

1. POLLUTANT And CAS NO. (if available)	2. MARK "X"			3. EFFLUENT							4. UNITS		5. INTAKE (optional)		
	a. Testing Required	a. Believed Present	b. Believed Absent	a. Maximum Daily Value		b. Maximum 30-Day Value (if available)		c. Long-Term Avg. Value (if available)		d. No. of Analyses	a. Concentration	b. Mass	a. Long-Term Avg Value		b. No. of Analyses
				(1) Concentration	(2) Mass	(1) Concentration	(2) Mass	(1) Concentration	(2) Mass				(1) Concentration	(2) Mass	
GC/MS FRACTION – ACID COMPOUNDS															
1A. 2-Chloro-phenol (95-57-8)	X			BDL						1	mg/L				
2A. 2,4-Dichlor-Orophenol (120-83-2)	X			BDL						1	mg/L				
3A. 2,4-Dimeth-ylphenol (105-67-9)	X			BDL						1	mg/L				
4A. 4,6-Dinitro-o-cresol (534-52-1)	X			BDL						1	mg/L				
5A. 2,4-Dinitro-phenol (51-28-5)	X			BDL						1	mg/L				
6A. 2-Nitro-phenol (88-75-5)	X			BDL						1	mg/L				
7A. 4-Nitro-phenol (100-02-7)	X			BDL						1	mg/L				
8A. P-chloro-m-cresol (59-50-7)	X			BDL						1	mg/L				
9A. Pentachloro-phenol (87-88-5)	X			BDL						1	mg/L				
10A. Phenol (108-05-2)	X			BDL						1	mg/L				
11A. 2,4,6-Tri-chlorophenol (88-06-2)	X			BDL						1	mg/L				
GC/MS FRACTION – BASE/NEUTRAL COMPOUNDS															
1B. Acena-phthene (83-32-9)	X			BDL						1	mg/L				

Part C – Continued

1. POLLUTANT And CAS NO. (if available)	2. MARK "X"			3. EFFLUENT							4. UNITS		5. INTAKE (optional)		
	a. Testing Required	a. Believed Present	b. Believed Absent	a. Maximum Daily Value		b. Maximum 30-Day Value (if available)		c. Long-Term Avg. Value (if available)		d. No. of Analyses	a. Concentration	b. Mass	a. Long-Term Avg Value		b. No. of Analyses
				(1) Concentration	(2) Mass	(1) Concentration	(2) Mass	(1) Concentration	(2) Mass				(1) Concentration	(2) Mass	
GC/MS FRACTION – BASE/NEUTRAL COMPOUNDS (Continued)															
2B. Acenaphtylene (208-96-8)	X			BDL						1	mg/L				
3B. Anthracene (120-12-7)	X			BDL						1	mg/L				
4B. Benzidine (92-87-5)	X			BDL						1	mg/L				
5B. Benzo(a)-anthracene (56-55-3)	X			BDL						1	mg/L				
6B. Benzo(a)-pyrene (50-32-8)	X			BDL						1	mg/L				
7B. 3,4-Benzo-fluoranthene (205-99-2)	X			BDL						1	mg/L				
8B. Benzo(ghl) perylene (191-24-2)	X			BDL						1	mg/L				
9B. Benzo(k)-fluoranthene (207-08-9)	X			BDL						1	mg/L				
10B. Bis(2-chlor-oethoxy)-methane (111-91-1)	X			BDL						1	mg/L				
11B. Bis (2-chlor-oisopropyl)-Ether	X			BDL						1	mg/L				
12B. Bis (2-ethyl-hexyl)-phthalate (117-81-7)	X			BDL						1	mg/L				

Part C – Continued

1. POLLUTANT And CAS NO. (if available)	2. MARK "X"			3. EFFLUENT							4. UNITS		5. INTAKE (optional)		
	a. Testing Required	a. Believed Present	b. Believed Absent	a. Maximum Daily Value		b. Maximum 30-Day Value (if available)		c. Long-Term Avg. Value (if available)		d. No. of Analyses	a. Concentration	b. Mass	a. Long-Term Avg Value		b. No. of Analyses
				(1) Concentration	(2) Mass	(1) Concentration	(2) Mass	(1) Concentration	(2) Mass				(1) Concentration	(2) Mass	
GC/MS FRACTION – BASE/NEUTRAL COMPOUNDS (Continued)															
13B. 4-Bromo-phenyl Phenyl ether (101-55-3)	X			BDL						1	mg/L				
14B. Butyl-benzyl phthalate (85-68-7)	X			BDL						1	mg/L				
15B. 2-Chloro-naphthalene (7005-72-3)	X			BDL						1	mg/L				
16B. 4-Chloro-phenyl phenyl ether (7005-72-3)	X			BDL						1	mg/L				
17B. Chrysene (218-01-9)	X			BDL						1	mg/L				
18B. Dibenzo-(a,h) Anthracene (53-70-3)	X			BDL						1	mg/L				
19B. 1,2-Dichloro-benzene (95-50-1)	X			BDL						1	mg/L				
20B. 1,3-Dichloro-Benzene (541-73-1)	X			BDL						1	mg/L				
21B. 1,4-Dichloro-benzene (106-46-7)	X			BDL						1	mg/L				
22B. 3,3-Dichloro-benzidene (91-94-1)	X			BDL						1	mg/L				
23B. Diethyl Phthalate (84-66-2)	X			BDL						1	mg/L				

Part C – Continued

1. POLLUTANT And CAS NO. (if available)	2. MARK "X"			3. EFFLUENT							4. UNITS		5. INTAKE (optional)		
	a. Testing Required	a. Believed Present	b. Believed Absent	a. Maximum Daily Value		b. Maximum 30-Day Value (if available)		c. Long-Term Avg. Value (if available)		d. No. of Analyses	a. Concentration	b. Mass	a. Long-Term Avg. Value		b. No. of Analyses
				(1) Concentration	(2) Mass	(1) Concentration	(2) Mass	(1) Concentration	(2) Mass				(1) Concentration	(2) Mass	
GC/MS FRACTION – BASE/NEUTRAL COMPOUNDS (Continued)															
24B. Dimethyl Phthalate (131-11-3)	X			BDL						1	mg/L				
25B. Di-N-butyl Phthalate (84-74-2)	X			BDL						1	mg/L				
26B. 2,4-Dinitro-toluene (121-14-2)	X			BDL						1	mg/L				
27B. 2,6-Dinitro-toluene (606-20-2)	X			BDL						1	mg/L				
28B. Di-n-octyl Phthalate (117-84-0)	X			BDL						1	mg/L				
29B. 1,2-diphenyl-hydrazine (as azonbenzene) (122-66-7)	X			BDL						1	mg/L				
30B. Fluoranthene (208-44-0)	X			BDL						1	mg/L				
31B. Fluorene (86-73-7)	X			BDL						1	mg/L				
32B. Hexachloro-benzene (118-71-1)	X			BDL						1	mg/L				
33B. Hexachloro-butadiene (87-68-3)	X			BDL						1	mg/L				
34B. Hexachloro-cyclopenta-diene (77-47-4)	X			BDL						1	mg/L				

Part C – Continued																
1. POLLUTANT And CAS NO. (if available)	2. MARK "X"			3. EFFLUENT							4. UNITS		5. INTAKE (optional)		
	a. Testing Required	a. Believed Present	b. Believed Absent	a. Maximum Daily Value		b. Maximum 30-Day Value (if available)		c. Long-Term Avg. Value (if available)		d. No. of Analyses	a. Concentration	b. Mass	a. Long-Term Avg Value		b. No. of Analyses
				(1) Concentration	(2) Mass	(1) Concentration	(2) Mass	(1) Concentration	(2) Mass				(1) Concentration	(2) Mass	
GC/MS FRACTION – BASE/NEUTRAL COMPOUNDS (Continued)															
35B. Hexachloroethane (67-72-1)	X			BDL						1	mg/L				
36B. Indneo-(1,2,3-oc)-Pyrene (193-39-5)	X			BDL						1	mg/L				
37B. Isophorone (78-59-1)	X			BDL						1	mg/L				
38B. Napthalene (91-20-3)	X			BDL						1	mg/L				
39B. Nitrobenzene (98-95-3)	X			BDL						1	mg/L				
40B. N-Nitrosodimethylamine (62-75-9)	X			BDL						1	mg/L				
41B. N-nitrosodi-n-propylamine (621-64-7)	X			BDL						1	mg/L				
42B. N-nitrosodiphenylamine (86-30-6)	X			BDL						1	mg/L				
43B. Phenanthrene (85-01-8)	X			BDL						1	mg/L				
44B. Pyrene (129-00-0)	X			BDL						1	mg/L				
45B. 1,2,4 Trichlorobenzene (120-82-1)	X			BDL						1	mg/L				

Part C – Continued

1. POLLUTANT And CAS NO. (if available)	2. MARK "X"			3. EFFLUENT							4. UNITS		5. INTAKE (optional)		
	a. Testing Required	a. Believed Present	b. Believed Absent	a. Maximum Daily Value		b. Maximum 30-Day Value (if available)		c. Long-Term Avg. Value (if available)		d. No. of Analyses	a. Concentration	b. Mass	a. Long-Term Avg. Value		b. No. of Analyses
				(1) Concentration	(2) Mass	(1) Concentration	(2) Mass	(1) Concentration	(2) Mass				(1) Concentration	(2) Mass	
GC/MS FRACTION – PESTICIDES															
1P. Aldrin (309-00-2)			X												
2P. α-BHC (319-84-6)			X												
3P. β-BHC (58-89-9)			X												
4P. gamma-BHC (58-89-9)			X												
5P. δ-BHC (319-86-8)			X												
6P. Chlordane (57-74-9)			X												
7P. 4,4'-DDT (50-29-3)			X												
8P. 4,4'-DDE (72-55-9)			X												
9P. 4,4'-DDD (72-54-8)			X												
10P. Dieldrin (60-57-1)			X												
11P. α-Endosulfan (115-29-7)			X												
12P. β-Endosulfan (115-29-7)			X												
13P. Endosulfan Sulfate (1031-07-8)			X												
14P. Endrin (72-20-8)			X												

Part C – Continued

1. POLLUTANT And CAS NO. (if available)	2. MARK "X"			3. EFFLUENT							4. UNITS		5. INTAKE (optional)		
	a. Testing Required	a. Believed Present	b. Believed Absent	a. Maximum Daily Value		b. Maximum 30-Day Value (if available)		c. Long-Term Avg. Value (if available)		d. No. of Analyses	a. Concentration	b. Mass	a. Long-Term Avg Value		b. No. of Analyses
				(1) Concentration	(2) Mass	(1) Concentration	(2) Mass	(1) Concentration	(2) Mass				(1) Concentration	(2) Mass	
GC/MS FRACTION – PESTICIDES															
15P. Endrin Aldehyde (7421-93-4)			X												
16P Heptachlor (76-44-8)			X												
17P. Heptaclor Epoxide (1024-57-3)			X												
18P. PCB-1242 (53469-21-9)			X												
19P. PCB-1254 (11097-69-1)			X												
20P. PCB-1221 (11104-28-2)			X												
21P. PCB-1232 (11141-16-5)			X												
22P. PCB-1248 (12672-29-6)			X												
23P. PCB-1260 (11096-82-5)			X												
24P. PCB-1016 (12674-11-2)			X												
25P. Toxaphene (8001-35-2)			X												

ATTACHMENT 1

USGS TOPOGRAPHIC MAP

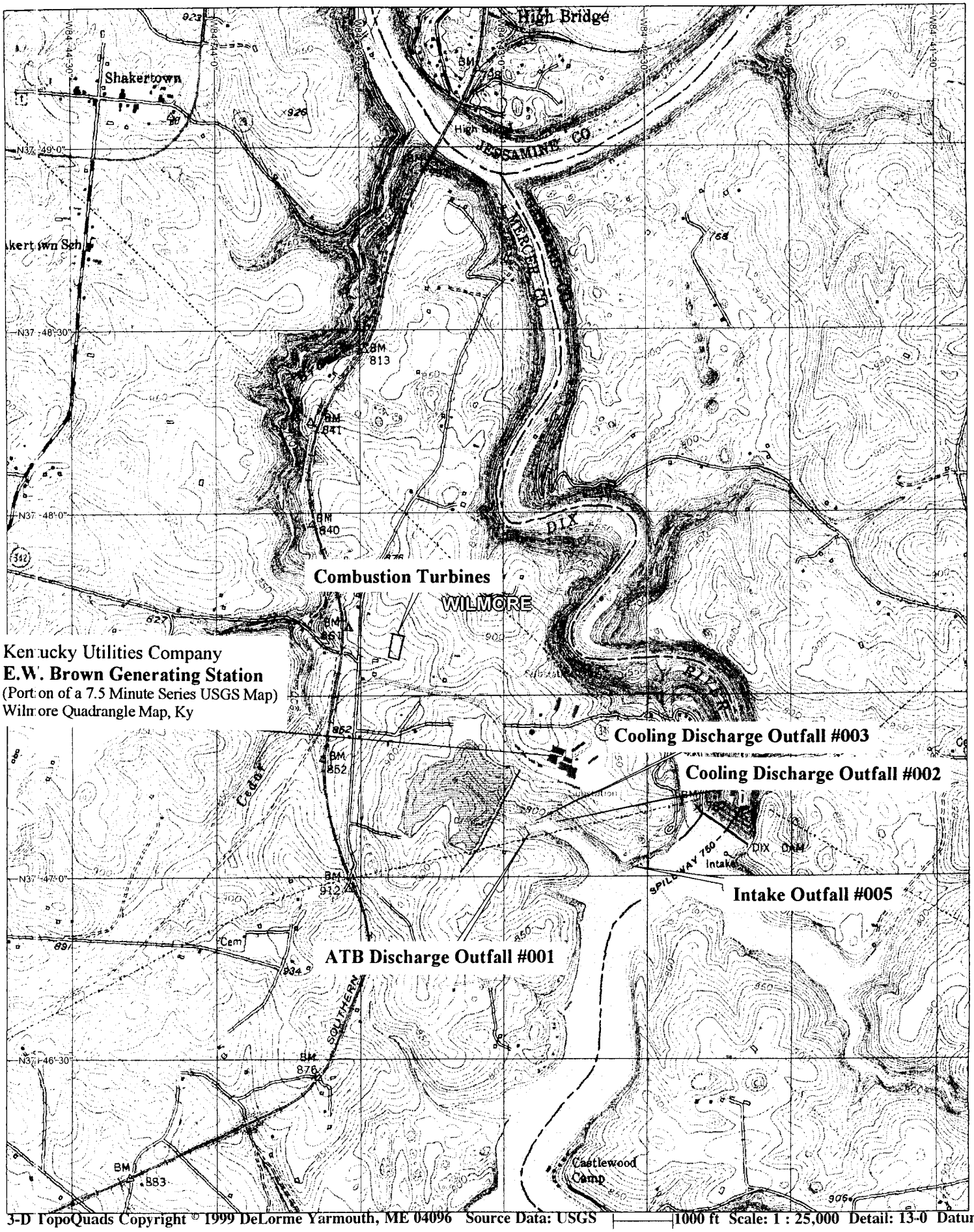

3-D TopoQuads Copyright © 1999 DeLorme Yarmouth, ME 04096 Source Data: USGS 1000 ft Scale: 1 : 25,000 Detail: 13-0 Datum:

ATTACHMENTS 2 & 3

DESCRIPTION OF EXISTING POLLUTION ABATEMENT FACILITIES

and

STORMWATER RUNOFF CALCULATIONS

E. W. BROWN GENERATING STATION

Description of Existing Pollution Abatement Facilities

Aug-06

Discharge Description			30-Day PMAC and Rainfall Flows 1- Day Maximum GPD	Daily Annual Average GPD
001 Ash Treatment Basin(s) Discharge:				
Auxiliary ATB				
1	Units 1 & 2 Bottom Ash Sluice		429,900	429,900
2	Unit 3 Bottom & Economizer Ash Sluice		1,479,900	1,479,900
3	Precipitation Areas (5d-g)		4,165,200	118,200
4	Flow from Primary ATB/Gypsum Basin		0	0
		Subtotal	6,075,000	2,028,000
Primary ATB/Gypsum Basin				
5	Units 1 & 2 Fly Ash Sluice		2,784,000	2,784,000
6	Unit 3 Fly Ash Sluice		4,141,200	4,141,200
7	Units 1 & 2 Oil/Water Separator Lift Station			
	Water Treatment Backwash Flows		109,900	109,900
	Precipitation: ESP & Chimney Area (A1)		220,300	6,200
8	Coal Pile Retention Basin			
	Crusher House Dust Collector		27,800	27,800
	Units 1-2 Cooling Tower Blowdown		213,000	213,000
	CT Comp. Cleaning Washwater		200	200
	Precipitation Coal Storage Area Runoff (A3)		660,300	18,700
9	Unit 3 Oil/Water Separator Lift Station			
	Unit 1-3 Building Sumps & Ash Hopper Seal Flows		794,000	794,000
	Precipitation Plant-Warehouse Area Drains (A2)		96,900	2,700
	Precipitation Dry Flyash Unloading Area (A10)		6,900	200
10	FGD Flows			
	FGD Gypsum Slurry to Dewatering Bldg/Basin		2,191,900	2,191,900
	Water Retained by Gypsum		-80,900	-80,900
	Precipitation Limestone & FGD Areas (A12c-i)		763,700	21,700
	Precipitation Gypsum Dewatering Plant Area (A12a-b)		263,300	7,500
11	Combustion Turbine Facility Flows			
	Comb.Turb. Facility Oil/Water Separators Lift Stations		8,000	8,000
	CT Aux Transformers Diked Pads Precipitation (A11a)		35,700	1,000
	CT Fuel Oil Tanks Bermed Area Precipitation(A11b)		113,200	3,200
	CT Fuel Oil Truck Unloading Area Precipitation (A11c)		40,700	1,200
	CT Aux Transformers Diked Pads Precipitation (A11d)		17,900	500
	CT Air Chiller Plant Floor Drains		100	100
	CT Inlet Air Chillers Condensate		34,900	34,900
	CT Air Chiller Evaporative Condensers Blowdown		4,700	4,700
12	Direct Precipitation to Main ATB/Gypsum Basin (A5a-c)		10,887,400	308,500
		Subtotal	23,335,100	10,600,200
COMBINED Main ATB and Auxiliary Basins Monitored Discharge		**TOTAL**	**29,410,100**	**12,628,200**
Additional Uncontaminated Flow Combined After Monitoring Point				
	Direct Precipitation to Auxiliary Basin Outer Slope, Perimiter Ditch & Sediment Control Basin (Area 6z-ab)		672,000	19,000
	Total		30,082,100	12,647,200

002 Units 1 & 2 Cooling Tower Blowdown

1.	Units 1 & 2 CT Blowdown	218,900	218,900
2.	Units 1 & 2 Roof Drains (A4a)	98,200	2,800
3.	Cooling Tower Direct Precipitation (A4b)	45,700	1,300
	Total	362,800	223,000

003 Unit 3 Cooling Tower Blowdown

1.	Unit 3 Cooling Tower Blowdown	13,900	13,900
2.	Unit 3 Roof Drains (A7a)	144,900	4,100
3.	Cooling Tower Direct Precipitation (A7b)	57,600	1,600
4.	Unit 3 Misc. Heat Exchangers	13,900	13,900
	Total	230,300	33,500

Non-Point Source Stormwater Runoff to Herrington Lake or Dix River:

1.	Area 6	171.76 acres (less Areas 6z-ab)	5,339,100	151,400
2.	Area 8	103.22 acres	3,464,700	98,200
3.	Area 9	191.70 acres	6,791,400	192,500
	Total from	466.68 acres	15,595,200	442,100

Stormwater/Rainfall Runoff Calculations

Data

Area		# Acres
Coefficient for Rainfall Runoff		Cr
10-Year, 24-Hour Rainfall	4.3	inch/24 hours
Annual Average Rainfall	44.49	inch/year

Runoff Equations:

1-Day Maximum Flow:
(#Acres)(43560 ft2)/Acre)(Cr)(4.3 in/day)(1 ft/12 inch)
(7.481 gal/ft3)(1 MG/1000000 Gal)
= 0.1167709 (#Acres)(Cr) MGD

Daily Annual Average Flow:
(#Acres)(43560 ft2)/Acre)(Cr)(44.49 in/year)(1 ft/12 inch)
(7.481 gal/ft3)(1 year/365 days)(1 MG/1000000 Gal)
= 0.0033101 (#Acres)(Cr) MGD

Runoff Coefficients:	Cr
Vegetated Areas (without slope considerations)	0.25
Gypsum & Loose Gravel (substations, rail beds, dam face, rock-faced slopes, etc.)	0.25
Packed Surfaces (Coal, Bare Soil, Packed Gravel [Roads, Parking Areas, etc.])	0.5
Impervious Surfaces (Pavement, Roofs, Cooling Tower Direct Precip)	0.85
Basin Surfaces	1

Runoff Calculations - KU's E.W. Brown Generating Station **Aug-06**

Area 1: Units 1&2 ESP, Chimney Area and Parking Lot to Units 1&2 Oil Separator to Ash Treatment Basin (001)

Surface Details	RO Coefficient Category	Cr	#Acres	1-Day Max (MGD)	Daily Ann.Avg (MGD)
a. Gravel Areas	Loose Gravel	0.250	0.44	0.0128	0.0004
b. Asphalt Parking	Impervious Surface	0.850	1.88	0.1866	0.0053
c. Grass (slope < 2%)	Vegetated Area	0.250	0.17	0.0050	0.0001
d. Roof Drains	Impervious Surface	0.850	0.16	0.0159	0.0005
	Total Area 1		2.65	0.2203	0.0062

Area 2: Unit 3 ESP, Chimney Area, and Warehouse Area to Unit 3 Oil Separator to Ash Treatment Basin (001)

Surface Details	RO Coefficient Category	Cr	#Acres	1-Day Max (MGD)	Daily Ann.Avg (MGD)
a. Gravel Area	Loose Gravel	0.250			
b. Gravel Area	Loose Gravel	0.250	0.36	0.0105	0.0003
c. Asphalt Parking (Warehouses)	Impervious Surface	0.850	0.87	0.0864	0.0024
d. Grass (slope < 2%)	Vegetated Area	0.250			
	Total Area 2		1.23	0.0969	0.0027

Area 3: Coal Storage and Handling Area to Coal Settling Basin to Ash Treatment Basin (001)

Surface Details	RO Coefficient Category	Cr	#Acres	1-Day Max (MGD)	Daily Ann.Avg (MGD)
a. Coal Pile	Packed Surface	0.500	10.29	0.6008	0.0170
b. Basin Surface	Basin Surface	1.000	0.51	0.0596	0.0017
	Total Area 3.		10.8	0.6603	0.0187

Area 4: Units 1&2 Roof Drains to Cooling Tower Blowdown Ditch (002)

Surface Details	RO Coefficient Category	Cr	#Acres	1-Day Max (MGD)	Daily Ann.Avg (MGD)
a. Roof Drains	Impervious Surface	0.850	0.99	0.0983	0.0028
b. Cooling Tower Direct Precipitation	Impervious Surface	0.850	0.46	0.0457	0.0013
	Total Area 4.		1.45	0.1439	0.0041

Area 5: Ash Treatment Basins (001)

Surface Details	RO Coefficient Category	Cr	#Acres	1-Day Max (MGD)	Daily Ann.Avg (MGD)
a. Main ATB Basin Surface	Basin Surface	1.000	79.59	9.2938	0.2634
b. Main ATB Inner Slope	Loose Gravel	0.250	34.35	1.0027	0.0284
c. Road around Main ATB	Packed Surface	0.500	10.12	0.5909	0.0167
d. Face between Main & Aux Ponds	Loose Gravel	0.250	7.44	0.2172	0.0062
e. Aux ATB Basin Surface	Basin Surface	1.000	26.03	3.0395	0.0862
f. Aux ATB Inner Slope	Loose Gravel	0.250	27.03	0.7891	0.0224
g. Road around Aux ATB	Packed Surface	0.500	2.05	0.1194	0.0034
	Total Area 5.		186.60	15.0526	0.4267

Area 6: Non-Point Source Uncontaminated Runoff to Herrington Lake

Surface Details	RO Coefficient Category	Cr	#Acres	1-Day Max (MGD)	Daily Ann.Avg (MGD)
a. Grass & Woods (slope <2%)	Vegetated Area	0.250	26.44	0.7719	0.0219
b. Dam Face (rip-rap)	Loose Gravel	0.250	39.92	1.1654	0.0330
c. Gravel Switch Yard	Loose Gravel	0.250	1.36	0.0397	0.0011
d. Grass & Woods (slope > 7%)	Vegetated Area	0.250	5.14	0.1501	0.0043
e. Grass & Woods (slope > 7%)	Vegetated Area	0.250	27.88	0.8139	0.0231
f. Grass (slope > 7%)	Vegetated Area	0.250	1.33	0.0388	0.0011
g. Grass (slope 2-7%)	Vegetated Area	0.250	0.96	0.0280	0.0008
h. Gravel Railroad Bed	Loose Gravel	0.250	1.56	0.0455	0.0013
i. Gravel Railroad Bed	Loose Gravel	0.250	2.54	0.0741	0.0021
j. Tractor Garage Roof Drains	Impervious Surface	0.850	0.09	0.0089	0.0003
k. Storage Building Roof Drain	Impervious Surface	0.850	0.02	0.0020	0.0001
l. Gravel Railroad Bed	Loose Gravel	0.250	3.30	0.0963	0.0027
m. Asphalt Road	Impervious Surface	0.850	2.70	0.2680	0.0076
n. Grass & Woods (slope > 7%)	Vegetated Area	0.250	31.76	0.9272	0.0263
o. Gravel Road	Packed Surface	0.500	0.34	0.0199	0.0006
p. Gravel Swich Yard (Brown North)	Loose Gravel	0.250	5.35	0.1562	0.0044
q. Grass (slope > 7%)	Vegetated Area	0.250	6.56	0.1915	0.0054
r. Gravel Road (near Dispatch)	Packed Surface	0.500	1.24	0.0724	0.0021
s. Asphalt Road (near Dispatch)	Impervious Surface	0.850	0.48	0.0476	0.0014
t. Grass (slope > 7%)	Vegetated Area	0.250	11.43	0.3337	0.0095
u. Roof Drains (Dispatch Buildings)	Impervious Surface	0.850	0.16	0.0159	0.0005
v. Oil Separator Surfaces	Impervious Surface	0.850	0.07	0.0069	0.0002
w. Rock-faced Slopes	Loose Gravel	0.250	0.32	0.0093	0.0003
x. CT Ice Plant Building & Storage Tanks	Loose Gravel	0.250	0.35	0.0102	0.0003
y. Training Building Parking Lot	Impervious Surface	0.850	0.46	0.0457	0.0013
z. Basin Surface (Sediment Control)	Basin Surface	1.000	1.12	0.1308	0.0037
aa. Rim Ditch	Loose Gravel	0.250	0.73	0.0213	0.0006
ab. Aux. Basin Outer Slope	Loose Gravel	0.250	17.81	0.5199	0.0147
	Total Area 6.		191.42	6.0111	0.1704

Area 7: Unit 3 Roof Drains to Cooling Tower Blowdown Ditch (003)

Surface Details	RO Coefficient Category	Cr	#Acres	1-Day Max (MGD)	Daily Ann.Avg (MGD)
a. Roof Drains	Impervious Surface	0.850	1.46	0.1449	0.0041
b. Cooling Tower Direct Precipitation	Impervious Surface	0.850	0.58	0.0576	0.0016
	Total Area 7.		2.04	0.2025	0.0057

Area 8: Non-Point Source Uncontaminated Runoff to Dix River

Surface Details	RO Coefficient Category	Cr	#Acres	1-Day Max (MGD)	Daily Ann.Avg (MGD)
a. Asphalt Road	Impervious Surface	0.850	2.03	0.2015	0.0057
b. Gravel Road	Packed Surface	0.500	1.47	0.0858	0.0024
c. Grass (slope > 7%)	Vegetated Area	0.250	21.77	0.6355	0.0180
d. Westcliff Sub. & Gravel Road	Loose Gravel	0.250	0.75	0.0219	0.0006
e. Asphalt Road	Impervious Surface	0.850	0.46	0.0457	0.0013
f. Grass & Woods (slope > 7%)	Vegetated Area	0.250	57.05	1.6654	0.0472
g. Dam & Spill Way (Gravel/Rock)	Loose Gravel	0.250	15.54	0.4537	0.0129
h. Dix Sub. Gravel	Loose Gravel	0.250	0.81	0.0236	0.0007
i. Training Building	Impervious Surface	0.850	0.17	0.0169	0.0005
j. Warehouse, Office, & Outbuildings	Impervious Surface	0.850	1.35	0.1340	0.0038
k. Concrete Aprons for Warehouse	Impervious Surface	0.850	0.36	0.0357	0.0010
l. Feeder Roads for the Warehouse	Impervious Surface	0.850	1.46	0.1449	0.0041
	Total Area 8.		103.22	3.4647	0.0982

Area 9: Non-Point Source Uncontaminated Runoff to Dix River

Surface Details	RO Coefficient Category	Cr	#Acres	1-Day Max (MGD)	Daily Ann.Avg (MGD)
a. Grass (slope 2-7%)	Vegetated Area	0.250	36.38	1.0620	0.0301
b. Grass (slope < 2%)	Vegetated Area	0.250	2.40	0.0701	0.0020
c. Grass (slope < 2%)	Vegetated Area	0.250	0.31	0.0090	0.0003
d. Asphalt Road	Impervious Surface	0.850	1.07	0.1062	0.0030
e. Grass (slope 2-7%)	Vegetated Area	0.250	24.09	0.7033	0.0199
f. Gravel Road	Packed Surface	0.500	1.07	0.0625	0.0018
g. Asphalt Road	Impervious Surface	0.850	0.77	0.0764	0.0022
h. CT-Building Roofs	Impervious Surface	0.850	0.92	0.0913	0.0026
i. CT-Facility-Equipment Roofs	Impervious Surface	0.850	0.32	0.0318	0.0009
j. Asphalt "Loop" Road & Internal Surfaces	Impervious Surface	0.850	2.76	0.2739	0.0078
k. Gravel Roads, Parking, & CT Sub.	Packed Surface	0.500	16.93	0.9886	0.0280
l. Fuel Oil Railcar Unloading Area	Loose Gravel	0.250	0.38	0.0111	0.0003
m. Rock-Faced Slopes	Loose Gravel	0.250	2.65	0.0774	0.0022
n. Grass Areas (slope 2-7%)	Vegetated Area	0.250	35.46	1.0352	0.0293
o. Grass (Houp Property)	Vegetated Area	0.250	57.27	1.6719	0.0474
p. FGD Duct fabrication & Conc Batch Plant	Packed Surface	0.500	8.92	0.5208	0.0148
	Total Area 9.		191.70	6.7914	0.1925

Area 10: Dry Fly Ash Handling (001)

Surface Details	RO Coefficient Category	Cr	#Acres	1-Day Max (MGD)	Daily Ann.Avg (MGD)
a. Asphalt, Dry Ash Handling	Impervious Surface	0.850	0.07	0.0069	0.0002
	Total Area 10.		0.07	0.0069	0.0002

Area 11: Combustion Turbines Facility Area and Building Roof Drains to Ash Treatment Basin (001) through OS-1, OS-2, OS-3

Surface Details	RO Coefficient Category	Cr	#Acres	1-Day Max (MGD)	Daily Ann.Avg (MGD)
a. CT-Facility Diked Transformer Pads	Impervious Surface	0.850	0.36	0.0357	0.0010
b. Fuel Oil Storage/Bermed Area	Impervious Surface	0.850	1.14	0.1132	0.0032
c. Fuel Oil Truck Diked Unloading	Impervious Surface	0.850	0.41	0.0407	0.0012
d. CT-5,6 & 7 Facility Diked Equipment	Impervious Surface	0.850	0.18	0.0179	0.0005
	Total Area 11		2.09	0.2074	0.0059

Area 12: Gypsum Dewatering, Gas Regulating Station, Limestone Unloading & Processing, FGD Operations

Runoff Coefficient Category	Surface Details	Cr	#Acres	1-Day Max (MGD)	Daily Ann.Avg (MGD)
a. Gypsum Stack	Gypsum	0.250	0.45	0.0131	0.0004
b. Gypsum Processing Building, Pad, & Roads	Impervious Surface	0.850	2.52	0.2501	0.0071
c. Gas Regulating Station	Loose Gravel	0.250	1.32	0.0385	0.0011
d. LS Truck Unloading Pads & Feeder Roads	Loose Gravel	0.250	0.60	0.0175	0.0005
e. LS Stockpile	Impervious Surface	0.850	1.98	0.1965	0.0056
f. LS Preparation Area	Impervious Surface	0.850	0.91	0.0903	0.0026
g. FGD Area	Impervious Surface	0.850	2.89	0.2868	0.0081
h. FGD Duct Area	Impervious Surface	0.850	0.45	0.0447	0.0013
i. LS Prep & FGD Feeder Roads	Impervious Surface	0.850	0.90	0.0893	0.0025
	Total Area 12		12.02	1.0270	0.0291

ATTACHMENTS 4, 5 & 6

STORMWATER RUNOFF DIAGRAM

and

WATER BALANCE DIAGRAM
30 DAY PMAC, 1-DAY MAXIMUM RAINFALL

and

WATER BALANCE DIAGRAM
30 DAY PMAC, AVERAGE RAINFALL

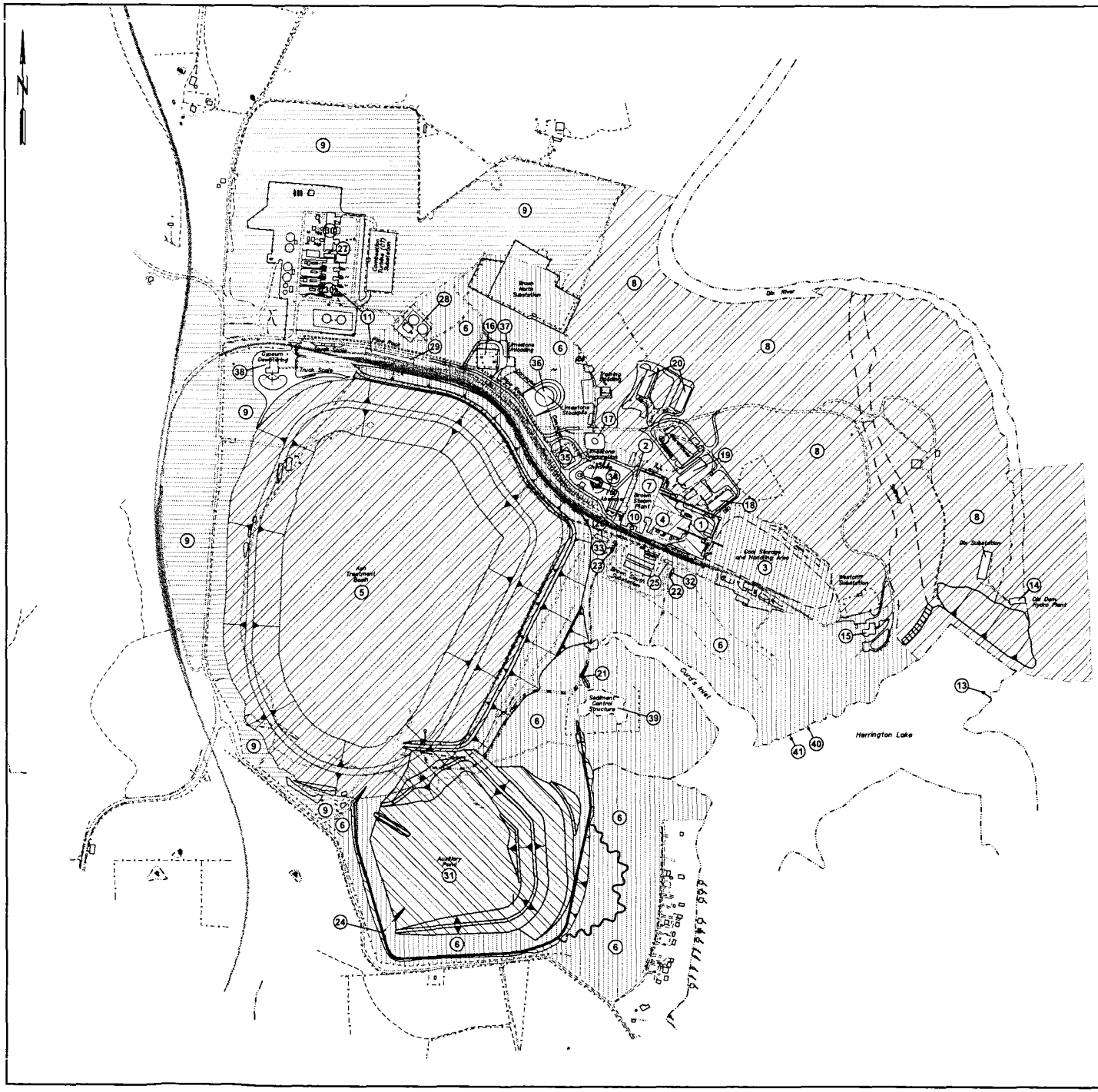

KEY

1. Units 1 & 2 ESP, Chimney & Parking Lot Areas to Units 1 & 2 Oil Separator to Ash Treatment Basin (#001)
2. Unit 3 ESP, Chimney, & Warehouse Areas to Unit 3 Oil Separator to Ash Treatment Basin (#001)
3. Coal Storage and Handling Areas to Coal Setting Basin to Ash Treatment Basin (#001)
4. Units 1 & 2 Roof Drains to Cooling Tower Blowdown Ditch (#002)
5. Ash Treatment Basin (#001)
6. Non-Point Source Uncontaminated Runoff to Herrington Lake
7. Unit 3 Roof Drains to Cooling Tower Blowdown Ditch (#003)
8. Non-Point Source Uncontaminated Runoff to Dix River
9. Non-Point Source Uncontaminated Runoff to Dix River
10. Dry Fly Ash Handling Area to Ash Treatment Basin (#001)
11. Combustion Turbine Diked Equipment (#001)
12. FGD and Limestone Equipment Process Areas (#001)
13. Dix Dam Hydro Plant Intake Structure
14. Dix Dam Hydro Plant
15. Dispatch Control Center
16. Natural Gas Pressure Regulating Station
17. Fuel Oil Storage Tank (526,000 gallon)
18. Unit 1 Cooling Tower
19. Unit 2 Cooling Tower
20. Unit 3 Cooling Tower
21. Ash Treatment Basin Discharge Monitoring Point (#001)
22. Units 1 & 2 Blowdown Ditch (#002)
23. Unit 3 Blowdown Ditch
24. Ash Treatment Basin Emergency Spillway
25. Units 1 & 2 Oil Separator
26. Unit 3 Oil Separator
27. Combustion Turbine Facility Buildings
28. Fuel Oil Storage Tank (1,100,000 gal./each) (#001)
29. Truck and Railcar Fuel Oil Unloading Facilities (#001)
30. C. T. Transformers, Auxiliary Transformer, and Static Starting Devices (#001)
31. Auxiliary Pond
32. Units 1 & 2 Cooling Tower Blowdown Oil-Water Separator (#002)
33. Unit 3 Cooling Tower Blowdown Oil-Water Separator (#003)
34. FGD Absorber and Facilities (Area 12 to #001)
35. Limestone Preparation (Area 12 to #001)
36. Limestone Stockpile (Area 12 to #001)
37. Limestone Unloading (Area 12 to #001)
38. Gypsum Dewatering (Area 12 to #001)
39. Sediment Control Structure (Area 6, Combines into #001 after Monitoring Point #001)
40. Units 1 and 2 Intake Structure
41. Unit 3 Intake Structure

FILE
BROWN
SITE PLAN
DRAWING

WILSON ENGINEERS
LEXINGTON, KY 40511-1268
859-422-3000

Fulbright Merriman Scott & McDowell

SITE DRAINAGE PLAN
KPDES APPLICATION
E.W. BROWN GENERATING STATION
KENTUCKY UTILITIES COMPANY
MERCER COUNTY, KENTUCKY

PROJECT NO.	LY2004151
DATE	AUGUST, 2006
DRAWN BY	DMG
CHECKED BY	R. MEDWA
CHECKED BY	R. MEDWA
SCALE	1" = 300'
REVISIONS	
1.	
2.	
3.	
4.	
5.	
6.	
7.	
8.	

SHEET 1 OF 1

LY2004151\151PA.DWG

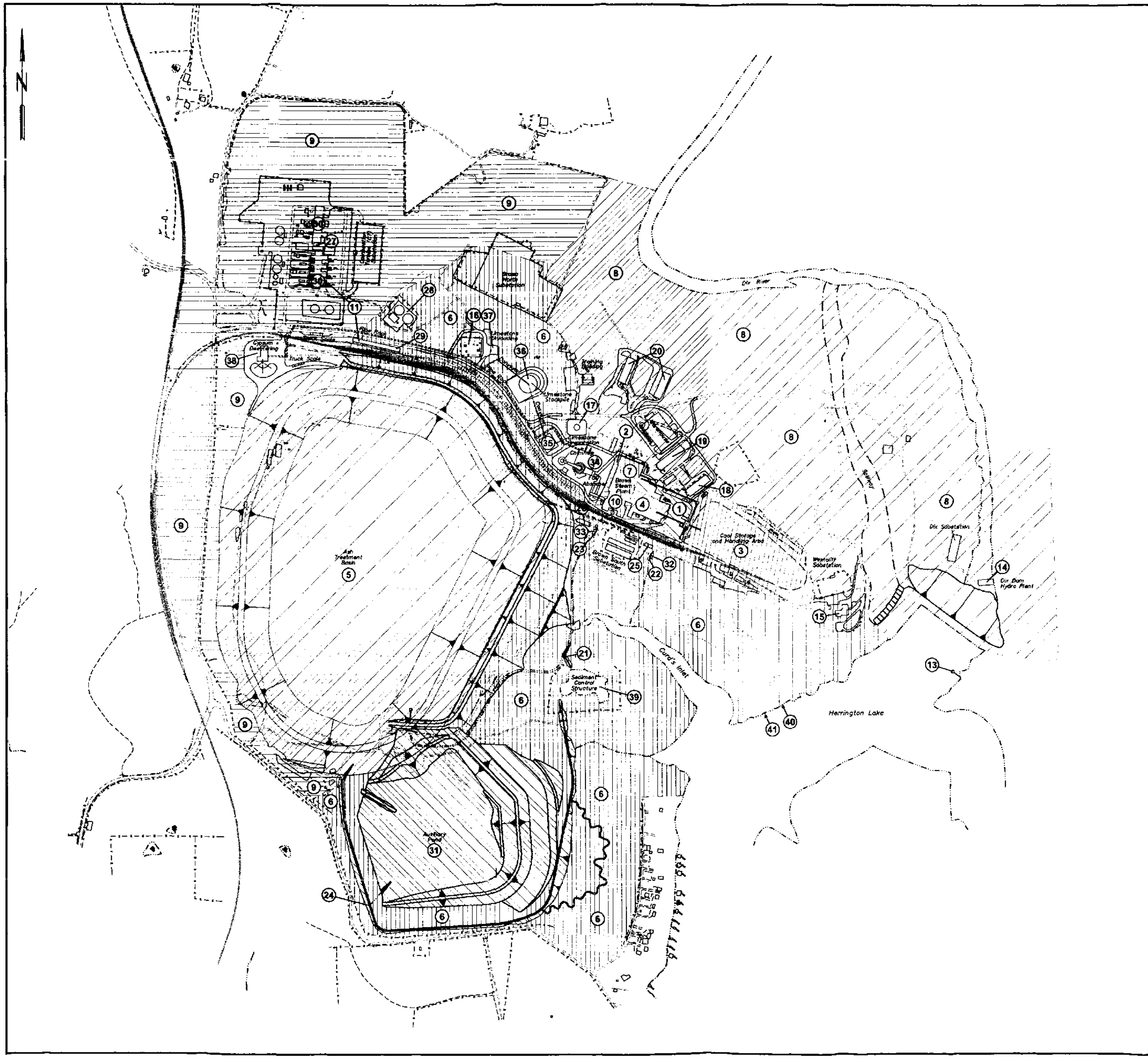

KEY

1. Units 1 & 2 ESP, Chimney & Parking Lot Areas to Units 1 & 2 Oil Separator to Ash Treatment Basin (#001)
2. Unit 3 ESP, Chimney, & Warehouse Areas to Unit 3 Oil Separator to Ash Treatment Basin (#001)
3. Coal Storage and Handling Areas to Coal Settling Basin to Ash Treatment Basin (#001)
4. Units 1 & 2 Roof Drains to Cooling Tower Blowdown Ditch (#002)
5. Ash Treatment Basin (#001)
6. Non-Point Source Uncontaminated Runoff to Herrington Lake
7. Unit 3 Roof Drains to Cooling Tower Blowdown Ditch (#003)
8. Non-Point Source Uncontaminated Runoff to Dix River
9. Non-Point Source Uncontaminated Runoff to Dix River
10. Dry Fly Ash Handling Area to Ash Treatment Basin (#001)
11. Combustion Turbine Diked Equipment (#001)
12. FGD and Limestone Equipment Process Areas (#001)
13. Dix Dam Hydro Plant Intake Structure
14. Dix Dam Hydro Plant
15. Dispatch Control Center
16. Natural Gas Pressure Regulating Station
17. Fuel Oil Storage Tank (526,000 gallon)
18. Unit 1 Cooling Tower
19. Unit 2 Cooling Tower
20. Unit 3 Cooling Tower
21. Ash Treatment Basin Discharge Monitoring Point (#001)
22. Units 1 & 2 Blowdown Ditch (#002)
23. Unit 3 Blowdown Ditch
24. Ash Treatment Basin Emergency Spillway
25. Units 1 & 2 Oil Separator
26. Unit 3 Oil Separator
27. Combustion Turbine Facility Buildings
28. Fuel Oil Storage Tank (1,100,000 gal./each) (#001)
29. Truck and Railcar Fuel Oil Unloading Facilities (#001)
30. C. T. Transformers, Auxiliary Transformer, and Static Starting Devices (#001)
31. Auxiliary Pond
32. Units 1 & 2 Cooling Tower Blowdown Oil-Water Separator (#002)
33. Unit 3 Cooling Tower Blowdown Oil-Water Separator (#003)
34. FGD Absorber and Facilities (Area 12 to #001)
35. Limestone Preparation (Area 12 to #001)
36. Limestone Stockpile (Area 12 to #001)
37. Limestone Unloading (Area 12 to #001)
38. Gypsum Dewatering (Area 12 to #001)
39. Sediment Control Structure (Area 6, Combines into #001 after Monitoring Point #001)
40. Units 1 and 2 Intake Structure
41. Unit 3 Intake Structure

150 0 300 600 FEET
GRAPHIC SCALE

FULLER MOSSBARGER SCOTT AND MAY ENGINEERS, INC.
1409 N. Forbes Rd.
Lexington, Kentucky 40511-2050
859-422-3000

FMSM ENGINEERS
LEXINGTON ST. LOUIS LOUISVILLE JEFFERSONVILLE CINCINNATI ATLANTA COLUMBUS

SITE DRAINAGE PLAN

KPDES APPLICATION
E.W. BROWN GENERATING STATION
KENTUCKY UTILITIES COMPANY
MERCER COUNTY, KENTUCKY

PROJECT NO.	LX2006151
DATE	AUGUST, 2006
DRAWN BY	DMC
CHECKED BY	R. MEDINA
CHECKED BY	R. MEDINA
SCALE	1"= 300'
REVISED	
1.	
2.	
3.	
4.	
5.	
6.	
7.	
8.	

LX2006151\6151PLAN.DWG

SHEET

1 OF 1

E.W. BROWN GENERATING STATION - KPDES WATER BALANCE DIAGRAM
PEAK MONTHLY AVERAGE CONDITIONS (PMAC) - PROCESS FLOWS

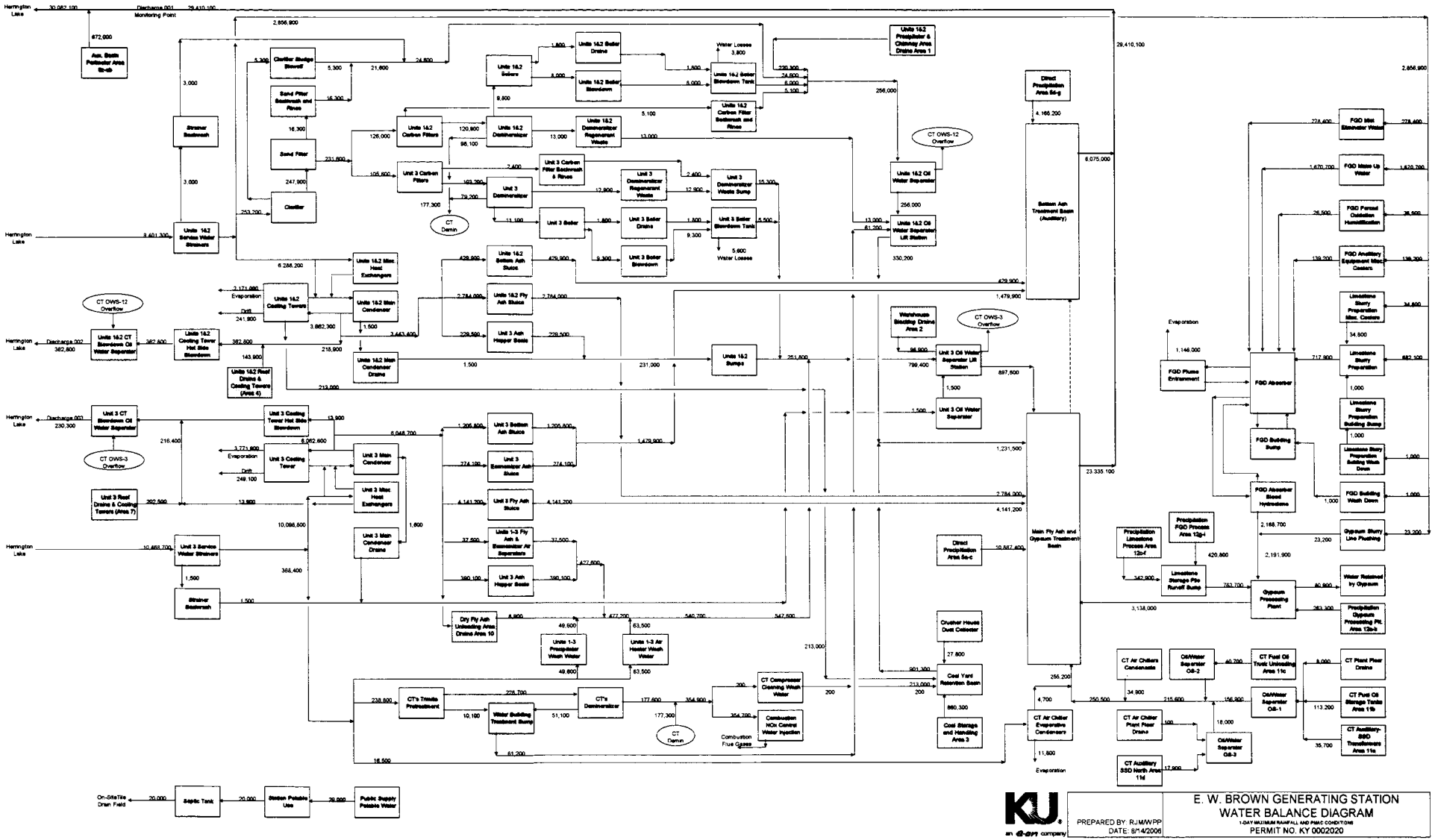

E.W. BROWN GENERATING STATION - KPDES WATER BALANCE DIAGRAM
PEAK MONTHLY AVERAGE CONDITIONS (PMAC) - PROCESS FLOWS
1-DAY MAXIMUM RAINFALL

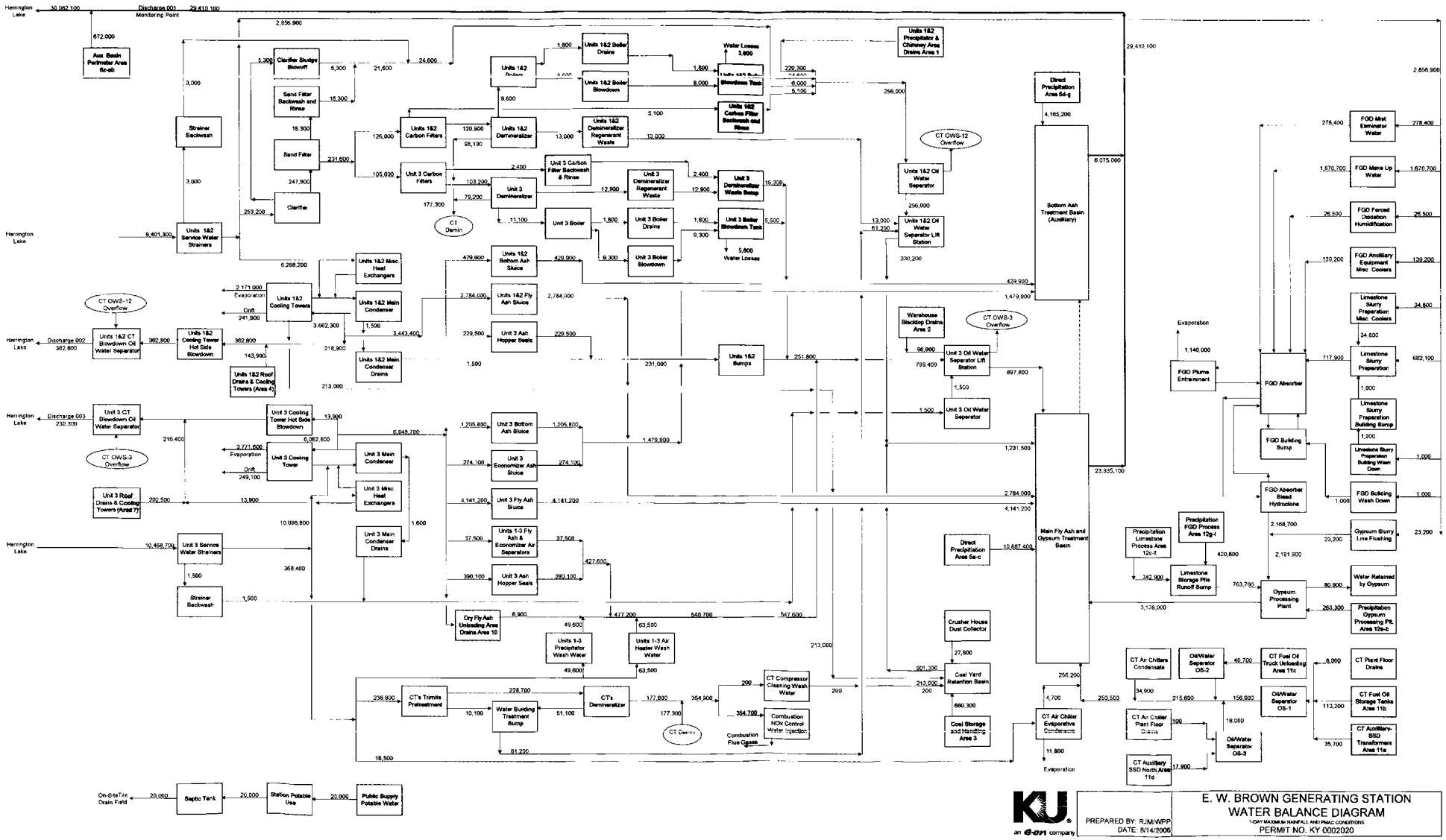

E.W. BROWN GENERATING STATION - KPDES WATER BALANCE DIAGRAM
PEAK MONTHLY AVERAGE CONDITIONS (PMAC) - PROCESS FLOWS

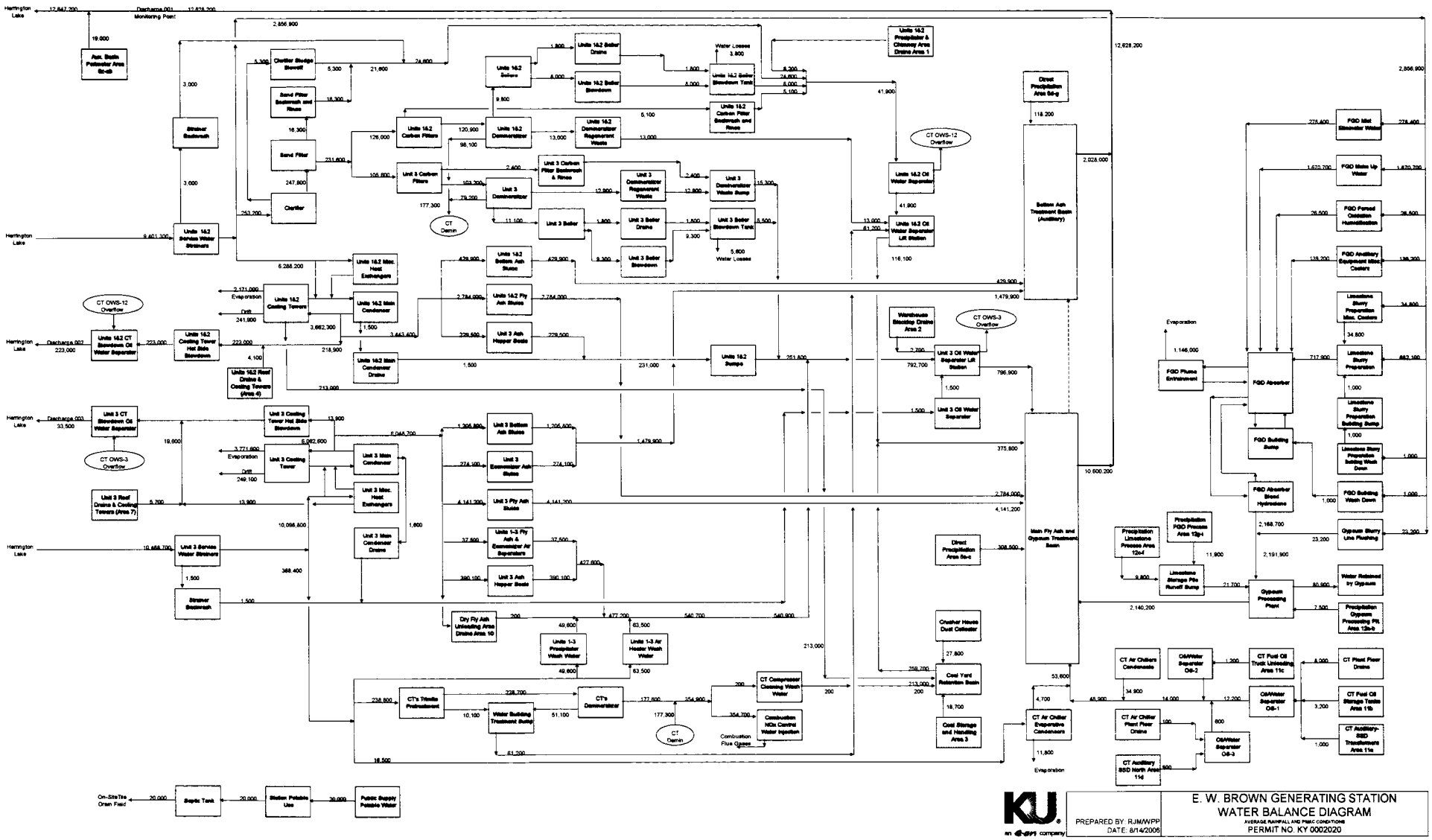

KU an PPL company

PREPARED BY: RJM/WPP
DATE: 8/14/2006

E. W. BROWN GENERATING STATION
WATER BALANCE DIAGRAM
AVERAGE RAINFALL AND PMAC CONDITIONS
PERMIT NO. KY 0002020

E.W. BROWN GENERATING STATION - KPDES WATER BALANCE DIAGRAM
PEAK MONTHLY AVERAGE CONDITIONS (PMAC) - PROCESS FLOWS
AVERAGE RAINFALL

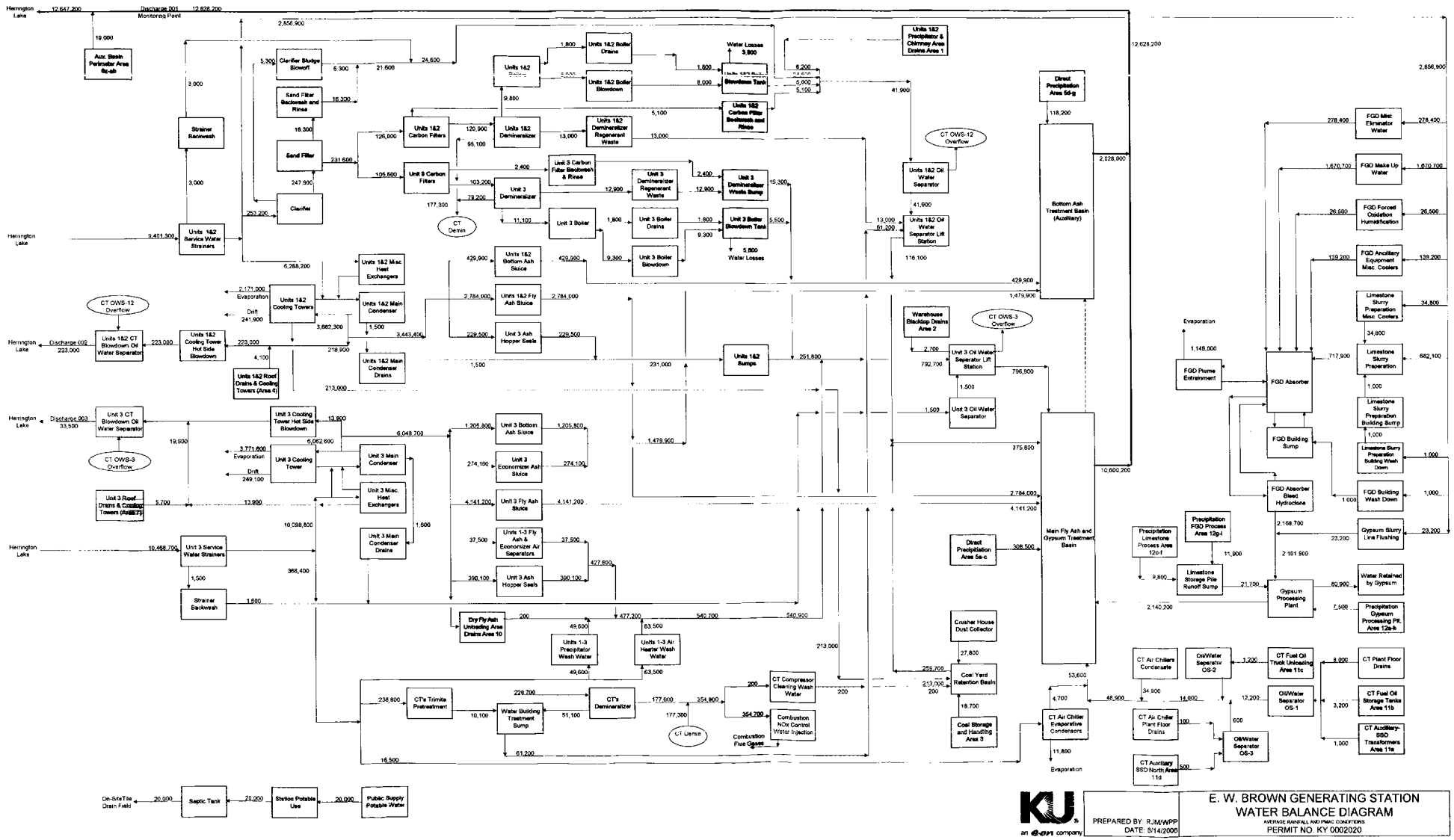

KU
an LG&E company

PREPARED BY: RJM/WPP
DATE: 8/14/2006

E. W. BROWN GENERATING STATION
WATER BALANCE DIAGRAM
AVERAGE RAINFALL AND PMAC CONDITIONS
PERMIT NO. KY 0002020

ATTACHMENT 7

LABORATORY RESULTS

Microbac

Microbac Laboratories, Inc.

KENTUCKY TESTING LABORATORY DIVISION
3323 Gilmore Industrial Blvd. Louisville, KY 40213 502.962.6400 Fax: 502.962.6411
Evansville, IN 812.464.9000 | Lexington, KY 859.276.3506 | Paducah, KY 270.898.3637

Member ACIL

Chemical, Biological, Physical, Molecular, and Toxicological Services

ELECTRONIC CERTIFICATE OF ANALYSIS

0607-01117

KENTUCKY UTILITIES COMPANY
TAMMY LAY
815 DIX DAM RD
HARRODSBURG, KY 40330-9282

Date Reported	07/21/2006
Date Due	07/28/2006
Date Received	07/19/2006
Date Sampled	07/19/2006
Invoice No.	84431
Customer #	6132
Customer P.O.	422652

BROWN TRC READINGS

Analysis	Qualif	Result	Unit	Method	Date	Tech
Sample: 001 **COOLING TOWER 001 AND 002**					Date & Time Sampled:	7/19/2006 @ 11:29
CHLORINE, TOTAL RESID.- FLD		<0.01	MG/L	EPA 330.5	07/19/2006	JRH
Sample: 002 **COOLING TOWER 003**					Date & Time Sampled:	7/19/2006 @ 11:22
CHLORINE, TOTAL RESID.- FLD		0.03	MG/L	EPA 330.5	07/19/2006	JRH
Sample: 003 **ASH POND**					Date & Time Sampled:	7/19/2006 @ 11:38
CHLORINE, TOTAL RESID.- FLD		0.02	MG/L	EPA 330.5	07/19/2006	JRH
Sample: 004 **INTAKE**					Date & Time Sampled:	7/19/2006 @ 11:49
CHLORINE, TOTAL RESID.- FLD		<0.01	MG/L	EPA 330.5	07/19/2006	JRH

UNLESS OTHERWISE NOTED, SAMPLES ARE ANALYZED AS RECEIVED.

RESPECTFULLY SUBMITTED: Ken Fo

MICROBAC LABORATORIES, INC.

For any feedback concerning our services, please contact Sean Hyde, the Managing Director at 502.962.6400, or Trevor Boyce, President, at tboyce@microbac.com or Robert Morgan, Chief Operating Officer, at rmorgan@microbac.com.

Microbac

Microbac Laboratories, Inc.

KENTUCKY TESTING LABORATORY DIVISION
3323 Gilmore Industrial Blvd. Louisville, KY 40213 502.962.6400 Fax: 502.962.6411
Evansville, IN 812.464.9000 | Lexington, KY 859.276.3506 | Paducah, KY 270.898.3637

Member ACIL

Chemical, Biological, Physical, Molecular, and Toxicological Services

ELECTRONIC CERTIFICATE OF ANALYSIS

0607-01117

Date Reported	07/21/2006
Date Received	07/19/2006
Date Sampled	07/19/2006

KENTUCKY UTILITIES COMPANY
TAMMY LAY
BROWN TRC READINGS

Analysis	Qualif	Result	Unit	Method	Date	Tech

QUALIFIER DEFINITIONS:

AR	Results reported on an as received basis.
B1	Analyte value in the method blank above control limit.
B2	Analyte value in the method blank is between the method detection limit and the reporting detection limit.
C1	Continuing calibration verification (CCV) above upper control limit, analyte(s) not detected.
D1	Surrogate recoveries not calculated due to necessary sample dilution.
DW	Results reported on a dry weight basis.
E1	Elevated reporting or detection limit(s) due to sample matrix interference and sample dilution.
E2	Elevated reporting or detection limit(s) due to high analyte concentration and sample dilution.
E3	Elevated reporting or detection limit(s) due to insufficient sample volume
H1	Sample received outside of holding time for these analytes.
H2	Analyte was prepared and/or analyzed outside of the analytical method holding time.
J1	The analyte was positively identified; analyte was detected between the reporting limit and method detection limit and the result is an estimated value.
J2	The analyte was positively identified;the result is above the quantitation range and is an estimated value.
L1	Lab control sample (LCS) recovery below lower control limit, all other batch QC acceptable.
L2	Lab control sample (LCS) recovery above upper control limit, all other batch QC acceptable.
L3	Lab control sample (LCS) recovery above upper control limit, analyte not detected.
M1	Matrix spike recovery outside control limits due to sample matrix interference or high analyte concentration.
MC	Miscellaneous (see conclusion statement)
N	The analysis indicates the presence of an analyte for which there is presumptive evidence to make a "tentative identification."
ND	Not detected at or below the reporting limit (or method detection limit, if listed).
NJ	The analysis indicates the presence of an analyte that has been "tentatively identified" and is an estimated value.
OUT	The above value, over the specification limit, was verified by a second analysis.
P1	Sample received was improperly preserved for these analytes.
P2	Sample pH greater than method limit of 2.
R	The sample results are rejected due to serious deficiencies in the ability to analyze the sample and meet quality control criteria. the presence or absence of the analyte cannot be verified.
R1	Relative percent difference (RPD) of matrix spike outside of control limit.
R2	Relative percent difference (RPD) of LCS outside of control limit.
R3	Relative percent difference (RPD) of sample duplicate matrix spike outside of control limit.
S1	One or more surrogates outside control limits, no target analytes detected.
S2	One or more surrogates outside control limits due to matrix interference.
S3	One or more surrogates outside control limits. the data was accepted based on the valid recovery of remaining surrogate(s).
SUB	Analysis subcontracted.
U	Analyte was analyzed for, but was not detected above the reported sample quantitation limit.
UJ	Analyte was not detected above the reporting limit, however, the reporting limit is approximate & may or may not represent the actual limit of quantitation necessary to accurately & precisely measure the analyte in the sample.
X	Analyte concentration estimated due to sample matrix interference and/or high analyte concentration interference.

EnviroData Group
Accredited Lab Data for Today's Environment

Microbac

2520 Regency Rd.
Lexington, KY 40503
Phone: 859-276-3506
Toll Free: 800-489-3506
Fax: 859-278-5665
E-mail: info@envirodatagroup.com

Analytical Results

Kentucky Utilities Company
Attn: Mr. Roger Medina
"LG&E Energy, Env. Affiars"
220 West Main
Louisville, KY 40232

Chain of Custody: 46489
Project Name:
Project Number:
Report Reference:46489-20060606142224

cc:

Date/Time Received: 05/31/2006 10:00
Temperature Upon Receipt: 4 C

Collector: M-JRH
Client Manager: Lisa Martin

Laboratory Sample #: 488145 **Client Sample ID:** Ash Pond **Sampled:** 05/31/2006 09:05
Sample Replicate # 1

Fecal Coliform **Method:** SM9222D **Prep. Method:** N/A
Analyzed by SES on May 31, 2006 at 14:30.

Parameter	Result	Units	Reporting Limit	Client Limit	Qualifiers
Bacteriological, Fecal Coliform	< 10.0	CFU/100ml	10.0	N/A	D

All samples were received intact and properly preserved unless otherwise noted.
The results reported relate only to the samples tested.
This report shall not be reproduced except in full, without written approval of this laboratory.

ACCREDITED
Lab#: 100343

Submitted by: Lisa Martin

Client Manager: Lisa Martin
Please contact Lisa Martin with any questions.

Specific tests covered by the A2LA accreditation meet the requirements of the A2LA accreditation standard. Please refer to http://www.envirodatagroup.com/EDG_A2LA_Accredited_Analytes.pdf on our website for a list of our current A2LA accreditations.

EnviroData Group

Microbac

Accredited Lab Data for Today's Environment

Data Qualifiers

Qualifier	Description
A	E. coli present.
A'	E. coli absent.
B	Analyte detected in associated MB.
C	Sample result confirmed.
D	Results reported from dilution.
E	Analyte concentration exceeds calibration range.
F	Unable to analyze due to sample matrix interference.
H	Sample was received or analyzed past the established holding time.
I	Estimated concentration.
K	Sample contained lighter hydrocarbon fractions.
L	Sample contained heavier hydrocarbon fractions.
M	MS and/or MSD recovery outside acceptance limits.
N	Presumptive evidence of analyte present.
O	Sample hydrocarbon pattern does not match calibration standard pattern.
P	Percent difference between primary and secondary column concentrations exceeds acceptance limit.
Q	LCS outside acceptance limits.
R	Data unusable.
S	Surrogate outside acceptance limits on initial and reanalysis.
S'	Surrogates diluted below detection.
T	Sample received improperly preserved.
U	Analyte not detected.
W	Raised quantitation or reporting limit due to limited sample volume.
Y	Replicate/Duplicate precision outside acceptance limits.
Z'	Calibration criteria exceeded but for this situation acceptable by method.
Z	Calibration criteria exceeded.
M'	Result from Method of Standard Additions (MSA).
Q'	LCS/LCD analyzed due to insufficient sample for MS/MSD.

The uncertainty of analytical results can be calculated using the following equation:

$$n = t^{*}s/1.414$$

where

t=12.706 (Students t value for 95% confidence interval of two replicates)

s= standard deviation of sample and duplicate data

1.414 is square root of the number of replicates (two)

Abbreviations

Laboratory Control Sample	(LCS)
Laboratory Control Duplicate	(LCD)
Matrix Spike	(MS)
Matrix Spike Duplicate	(MSD)
Method Blank	(MB)

EnviroData Group
Accredited Lab Data for Today's Environment

Microbac

2520 Regency Rd.
Lexington, KY 40503
Phone: 859-276-3506
Toll Free: 800-489-3506
Fax: 859-278-5665
E-mail: info@envirodatagroup.com

Analytical Results

Kentucky Utilities Company
Attn: Mr. Roger Medina
"LG&E Energy, Env. Affiars"
220 West Main
Louisville, KY 40232

Chain of Custody: 46315
Project Name:
Project Number:
Report Reference:46315-20060523161039

cc:

Date/Time Received: 05/17/2006 14:00
Temperature Upon Receipt: 4 C

Collector: M-JRH
Client Manager: Lisa Martin

Laboratory Sample #: 486815 **Client Sample ID:** 002 Cooling Tower Blowdown **Sampled:** 05/17/2006 10:42
Sample Replicate # 1

Fecal Coliform **Method:** SM9222D **Prep. Method:** N/A
Analyzed by SES on May 17, 2006 at 13:55.

Parameter	Result	Units	Reporting Limit	Client Limit	Qualifiers
Bacteriological, Fecal Coliform	< 10.0	CFU/100ml	10.0	N/A	D

Laboratory Sample #: 486816 **Client Sample ID:** 003 Cooling Tower Blowdown **Sampled:** 05/17/2006 10:46
Sample Replicate # 1

Fecal Coliform **Method:** SM9222D **Prep. Method:** N/A
Analyzed by SES on May 17, 2006 at 13:55.

Parameter	Result	Units	Reporting Limit	Client Limit	Qualifiers
Bacteriological, Fecal Coliform	< 10.0	CFU/100ml	10.0	N/A	D

Laboratory Sample #: 486817 **Client Sample ID:** Plant Intake **Sampled:** 05/17/2006 10:19
Sample Replicate # 1

Fecal Coliform **Method:** SM9222D **Prep. Method:** N/A
Analyzed by SES on May 17, 2006 at 13:55.

Parameter	Result	Units	Reporting Limit	Client Limit	Qualifiers
Bacteriological, Fecal Coliform	< 10.0	CFU/100ml	10.0	N/A	D

All samples were received intact and properly preserved unless otherwise noted.
The results reported relate only to the samples tested.
This report shall not be reproduced except in full, without written approval of this laboratory.

ACCREDITED
Lab#: 100343

Submitted by: Lisa Martin

Client Manager: Lisa Martin
Please contact Lisa Martin with any questions.

Specific tests covered by the A2LA accreditation meet the requirements of the A2LA accreditation standard. Please refer to http://www.envirodatagroup.com/EDG_A2LA_Accredited_Analytes.pdf on our website for a list of our current A2LA accreditations.

Results reported on a Wet Weight Basis

Issued: 5/23/2006

EnviroData Group

Microbac

Accredited Lab Data for Today's Environment

Data Qualifiers

Qualifier	Description
A	E. coli present.
A'	E. coli absent.
B	Analyte detected in associated MB.
C	Sample result confirmed.
D	Results reported from dilution.
E	Analyte concentration exceeds calibration range.
F	Unable to analyze due to sample matrix interference.
H	Sample was received or analyzed past the established holding time.
J	Estimated concentration.
K	Sample contained lighter hydrocarbon fractions.
L	Sample contained heavier hydrocarbon fractions.
M	MS and/or MSD recovery outside acceptance limits.
N	Presumptive evidence of analyte present.
O	Sample hydrocarbon pattern does not match calibration standard pattern.
P	Percent difference between primary and secondary column concentrations exceeds acceptance limit.
Q	LCS outside acceptance limits.
R	Data unusable.
S	Surrogate outside acceptance limits on initial and reanalysis.
S'	Surrogates diluted below detection.
T	Sample received improperly preserved.
U	Analyte not detected.
W	Raised quantitation or reporting limit due to limited sample volume.
Y	Replicate/Duplicate precision outside acceptance limits.
Z'	Calibration criteria exceeded but for this situation acceptable by method.
Z	Calibration criteria exceeded.
M'	Result from Method of Standard Additions (MSA).
Q'	LCS/LCD analyzed due to insufficient sample for MS/MSD.

The uncertainty of analytical results can be calculated using the following equation:

$$n = t*s/1.414$$

where

t=12.706 (Students t value for 95% confidence interval of two replicates)

s= standard deviation of sample and duplicate data

1.414 is square root of the number of replicates (two)

Abbreviations

Laboratory Control Sample	(LCS)
Laboratory Control Duplicate	(LCD)
Matrix Spike	(MS)
Matrix Spike Duplicate	(MSD)
Method Blank	(MB)

EnviroData Group
Accredited Lab Data for Today's Environment

Microbac

2520 Regency Rd.
Lexington, KY 40503
Phone: 859-276-3506
Toll Free: 800-489-3506
Fax: 859-278-5665
E-mail: info@envirodatagroup.com

Analytical Results

Kentucky Utilities Company
Attn: Mr. Roger Medina
"LG&E Energy, Env. Affiars"
220 West Main
Louisville, KY 40232

Chain of Custody: 46142
Project Name:
Project Number:
Report Reference:46142-20060526143931

cc:

Date/Time Received: 05/09/2006 14:00
Temperature Upon Receipt: 3 C

Collector: M-JRH
Client Manager: Lisa Martin

Laboratory Sample #: 485484 **Client Sample ID:** 001-Ash Treatment Basin Effluent **Sampled:** 05/09/2006 10:45
Sample Replicate # 1

Biochemical Oxygen Demand-Carbonaceous **Method:** EPA 405.1 **Prep. Method:** N/A
Analyzed by JRV on May 10, 2006 at 08:00.

Parameter	Result	Units	Reporting Limit	Client Limit	Qualifiers
Oxygen Demand, Biochemical, 5-Day/	< 2.00	mg/L	2.00	N/A	

Organic Nitrogen **Method:** EPA351.2/350.1 **Prep. Method:** CALC
Analyzed by CALC on May 18, 2006 at 16:19.

Parameter	Result	Units	Reporting Limit	Client Limit	Qualifiers
Nitrogen, Organic	0.235	mg/L	0.100	N/A	

Total Hardness **Method:** SM 2340B **Prep. Method:** CALC
Analyzed by CALC on May 24, 2006 at 17:39.

Parameter	Result	Units	Reporting Limit	Client Limit	Qualifiers
Hardness, Total	276	mg/L CaCO3	1.25	N/A	

pH (Field) **Method:** EPA150.1/SW9045 **Prep. Method:** N/A
Analyzed by FIELD on May 09, 2006 at 10:45.

Parameter	Result	Units	Reporting Limit	Client Limit	Qualifiers
pH (Field)	7.72	S.U.	N/A	N/A	

Temperature (Field) **Method:** EPA170.1 **Prep. Method:** N/A
Analyzed by FIELD on May 09, 2006 at 10:45.

Parameter	Result	Units	Reporting Limit	Client Limit	Qualifiers
Temperature (Field)	22.9	Celsius	N/A	N/A	

Flow (Field) **Method:** **Prep. Method:** N/A
Analyzed by FIELD on May 09, 2006 at 10:45.

Parameter	Result	Units	Reporting Limit	Client Limit	Qualifiers
Flow (Client)	0.002	MGD	N/A	N/A	

Inorganic Anions **Method:** EPA 300 **Prep. Method:** N/A
Analyzed by KTL on May 16, 2006 at 9:31.

Parameter	Result	Units	Reporting Limit	Client Limit	Qualifiers
Fluoride	0.770	MG/L	0.05	N/A	
Chloride	13.0	MG/L	0.05	N/A	
Sulfate	200	MG/L	0.02	N/A	

Results reported on a Wet Weight Basis

Issued: 5/26/2006

EnviroData Group

Microbac

Accredited Lab Data for Today's Environment

Chain of Custody: 46142
Project Name:
Project Number:

Laboratory Sample #: 485484 **Client Sample ID:** 001-Ash Treatment Basin Effluent **Sampled:** 05/09/2006 10:45
Sample Replicate # 1

Volatile Organics **Method:** EPA624 **Prep. Method:** N/A

Analyzed by KRS on May 10, 2006 at 09:25.

Parameter	Result	Units	Reporting Limit	Client Limit	Qualifiers
1,2-Dichloroethane-d4	126	% Recovery		N/A	
d8-Toluene	108	% Recovery		N/A	
4-Bromofluorobenzene	90	% Recovery		N/A	
Chloromethane	< 0.0050	mg/L	0.0050	N/A	
Bromomethane	< 0.0050	mg/L	0.0050	N/A	
Vinyl Chloride	< 0.0050	mg/L	0.0050	N/A	
Chloroethane	< 0.0050	mg/L	0.0050	N/A	
Acrolein	< 0.010	mg/L	0.010	N/A	
Methylene Chloride	< 0.0050	mg/L	0.0050	N/A	
Trichlorofluoromethane	< 0.0050	mg/L	0.0050	N/A	
1,1-Dichloroethene	< 0.0050	mg/L	0.0050	N/A	
Methyl tert-butyl ether	< 0.0050	mg/L	0.0050	N/A	
1,1-Dichloroethane	< 0.0050	mg/L	0.0050	N/A	
Acrylonitrile	< 0.0050	mg/L	0.0050	N/A	
trans-1,2-Dichloroethene	< 0.0050	mg/L	0.0050	N/A	
Chloroform	< 0.0050	mg/L	0.0050	N/A	
1,2-Dichloroethane	< 0.0050	mg/L	0.0050	N/A	
1,1,1-Trichloroethane	< 0.0050	mg/L	0.0050	N/A	
Carbon Tetrachloride	< 0.0050	mg/L	0.0050	N/A	
Bromodichloromethane	< 0.0050	mg/L	0.0050	N/A	
1,2-Dichloropropane	< 0.0050	mg/L	0.0050	N/A	
2-Chloroethylvinyl ether	< 0.010	mg/L	0.010	N/A	
cis-1,3-Dichloropropene	< 0.0050	mg/L	0.0050	N/A	
Trichloroethene	< 0.0050	mg/L	0.0050	N/A	
Benzene	< 0.0050	mg/L	0.0050	N/A	
Dibromochloromethane	< 0.0050	mg/L	0.0050	N/A	
trans-1,3-Dichloropropene	< 0.0050	mg/L	0.0050	N/A	
1,1,2-Trichloroethane	< 0.0050	mg/L	0.0050	N/A	
Bromoform	< 0.0050	mg/L	0.0050	N/A	
Tetrachloroethene	< 0.0050	mg/L	0.0050	N/A	
1,1,2,2-Tetrachloroethane	< 0.0050	mg/L	0.0050	N/A	
Toluene	< 0.0050	mg/L	0.0050	N/A	
Chlorobenzene	< 0.0050	mg/L	0.0050	N/A	
Ethylbenzene	< 0.0050	mg/L	0.0050	N/A	
m/p Xylenes	< 0.010	mg/L	0.010	N/A	
1,3-Dichlorobenzene	< 0.0050	mg/L	0.0050	N/A	
1,4-Dichlorobenzene	< 0.0050	mg/L	0.0050	N/A	
1,2-Dichlorobenzene	< 0.0050	mg/L	0.0050	N/A	
Naphthalene	< 0.0050	mg/L	0.0050	N/A	
Xylenes	< 0.015	mg/L	0.015	N/A	

Semivolatile Organics **Method:** EPA625 **Prep. Method:** EPA 625

Analyzed by KTL on May 16, 2006 at 22:00.

Parameter	Result	Units	Reporting Limit	Client Limit	Qualifiers

EnviroData Group

Microbac

Accredited Lab Data for Today's Environment

Chain of Custody: 46142
Project Name:
Project Number:

Laboratory Sample #: 485484 **Client Sample ID:** 001-Ash Treatment Basin Effluent **Sampled:** 05/09/2006 10:45
Sample Replicate # 1

Semivolatile Organics **Method:** EPA625 **Prep. Method:** EPA 625

Analyzed by KTL on May 16, 2006 at 22:00.

Parameter	Result	Units	Reporting Limit	Client Limit	Qualifiers
2,4,5-Trichlorophenol		mg/L	0.01	N/A	
2-Fluorophenol	42	% Recovery		N/A	
Phenol-d5		% Recovery		N/A	
Nitrobenzene-d5	39	% Recovery		N/A	
2-Fluorobiphenyl	42	% Recovery		N/A	
2,4,6-Tribromophenol	43	% Recovery		N/A	
N-Nitrosodimethylamine	< 0.010	MG/L	0.01	N/A	
Bis(2-Chloroethyl)Ether	< 0.010	MG/L	0.01	N/A	
Phenol	< 0.010	MG/L	0.01	N/A	
2-Chlorophenol	< 0.010	MG/L	0.01	N/A	
1,3-Dichlorobenzene	< 0.010	MG/L	0.01	N/A	
1,4-Dichlorobenzene	< 0.010	MG/L	0.01	N/A	
1,2-Dichlorobenzene	< 0.010	MG/L	0.01	N/A	
Bis(2-Chloroisopropyl)Ether	< 0.010	MG/L	0.01	N/A	
Hexachloroethane	< 0.010	MG/L	0.01	N/A	
N-Nitroso-Di-n-Propylamine	< 0.010	MG/L	0.01	N/A	
Nitrobenzene	< 0.010	MG/L	0.01	N/A	
Isophorone	< 0.010	MG/L	0.01	N/A	
2-Nitrophenol	< 0.010	MG/L	0.01	N/A	
2,4-Dimethylphenol	< 0.010	MG/L	0.01	N/A	
Bis(2-chloroethoxy)methane	< 0.010	MG/L	0.01	N/A	
2,4-Dichlorophenol	< 0.010	MG/L	0.01	N/A	
1,2,4-Trichlorobenzene	< 0.010	MG/L	0.01	N/A	
Naphthalene	< 0.010	MG/L	0.01	N/A	
Hexachlorobutadiene	< 0.010	MG/L	0.01	N/A	
4-Chloro-3-Methylphenol	< 0.010	MG/L	0.01	N/A	
Hexachlorocyclopentadiene	< 0.010	MG/L	0.01	N/A	
2,4,6-Trichlorophenol	< 0.010	MG/L	0.01	N/A	
2-Chloronaphthalene	< 0.010	MG/L	0.01	N/A	
Acenaphthylene	< 0.010	MG/L	0.01	N/A	
Dimethylphthalate	< 0.010	MG/L	0.01	N/A	
2,6-Dinitrotoluene	< 0.010	MG/L	0.01	N/A	
Acenaphthene	< 0.010	MG/L	0.01	N/A	
2,4-Dinitrophenol	< 0.010	MG/L	0.01	N/A	
2,4-Dinitrotoluene	< 0.010	MG/L	0.01	N/A	
4-Nitrophenol	< 0.010	MG/L	0.01	N/A	
Fluorene	< 0.010	MG/L	0.01	N/A	
4-Chlorophenyl-Phenylether	< 0.010	MG/L	0.01	N/A	
Diethylphthalate	< 0.010	MG/L	0.01	N/A	
2-Methyl-4,6-Dinitrophenol	< 0.010	MG/L	0.01	N/A	
N-Nitrosodiphenylamine	< 0.010	MG/L	0.01	N/A	
4-Bromophenyl-Phenylether	< 0.010	MG/L	0.01	N/A	
Hexachlorobenzene	< 0.010	MG/L	0.01	N/A	
Pentachlorophenol	< 0.010	MG/L	0.01	N/A	

Results reported on a Wet Weight Basis

Issued: 5/26/2006

EnviroData Group

Microbac

Accredited Lab Data for Today's Environment

Chain of Custody: 46142
Project Name:
Project Number:

Laboratory Sample #: 485484 **Client Sample ID:** 001-Ash Treatment Basin Effluent **Sampled:** 05/09/2006 10:45
Sample Replicate # 1

Semivolatile Organics **Method:** EPA625 **Prep. Method:** EPA 625
Analyzed by KTL on May 16, 2006 at 22:00.

Parameter	Result	Units	Reporting Limit	Client Limit	Qualifiers
Phenanthrene	< 0.010	MG/L	0.01	N/A	
Anthracene	< 0.010	MG/L	0.01	N/A	
Di-n-Butylphthalate	< 0.010	MG/L	0.01	N/A	
Fluoranthene	< 0.010	MG/L	0.01	N/A	
Benzidene	< 0.010	MG/L	0.01	N/A	
Butylbenzylphthalate	< 0.010	MG/L	0.01	N/A	
3,3-Dichlorobenzidine	< 0.010	MG/L	0.01	N/A	
Benzo(a)Anthracene	< 0.010	MG/L	0.01	N/A	
Chrysene	< 0.010	MG/L	0.01	N/A	
Bis(2-Ethylhexyl)Phthalate	< 0.010	MG/L	0.01	N/A	
Di-n-Octylphthalate	< 0.010	MG/L	0.01	N/A	
Benzo(b)Fluoranthene	< 0.010	MG/L	0.01	N/A	
Benzo(k)Fluoranthene	< 0.010	MG/L	0.01	N/A	
Benzo(a)Pyrene	< 0.010	MG/L	0.01	N/A	
Indeno(1,2,3-cd)Pyrene	< 0.010	MG/L	0.01	N/A	
Dibenzo(a,h)Anthracene	< 0.010	MG/L	0.01	N/A	
Benzo(g,h,i)Perylene	< 0.010	MG/L	0.01	N/A	
Pyrene	< 0.010	MG/L	0.01	N/A	

Total Metals **Method:** EPA200.7 **Prep. Method:** EPA 200.7
Analyzed by KTL on May 12, 2006 at 0:00.

Parameter	Result	Units	Reporting Limit	Client Limit	Qualifiers
Total Aluminum	1.00	MG/L	1	N/A	
Total Antimony	< 0.020	MG/L	0.01	N/A	
Total Arsenic	0.100	MG/L	0.1	N/A	
Total Barium	0.220	MG/L	0.01	N/A	
Total Beryllium	< 0.010	MG/L	0.01	N/A	
Total Boron	0.670	MG/L	0.5	N/A	
Total Cadmium	< 0.010	MG/L	0.01	N/A	
Total Calcium	87.2	MG/L	0.5	N/A	
Total Chromium	< 0.010	MG/L	0.01	N/A	
Total Cobalt	< 0.010	MG/L	0.01	N/A	
Total Copper	0.020	MG/L	0.01	N/A	
Total Iron	0.840	MG/L	0.05	N/A	
Total Lead	< 0.010	MG/L	0.01	N/A	
Total Magnesium	14.0	MG/L	0.1	N/A	
Total Manganese	0.220	MG/L	0.01	N/A	
Total Molybdenum	< 0.020	MG/L	0.02	N/A	
Total Nickel	0.010	MG/L	0.01	N/A	
Total Selenium	< 0.100	MG/L	0.1	N/A	
Total Silver	< 0.010	MG/L	0.01	N/A	
Total Thallium	< 0.050	MG/L	0.05	N/A	
Total Titanium	0.060	MG/L	0.01	N/A	
Total Zinc	< 0.010	MG/L	0.01	N/A	

Results reported on a Wet Weight Basis

Issued: 5/26/2006

EnviroData Group

Microbac

Accredited Lab Data for Today's Environment

Chain of Custody: 46142
Project Name:
Project Number:

Laboratory Sample #: 485484 **Client Sample ID:** 001-Ash Treatment Basin Effluent **Sampled:** 05/09/2006 10:45
Sample Replicate # 1

Total Metals **Method:** EPA200.7 **Prep. Method:** EPA 200.7
Analyzed by KTL on May 12, 2006 at 0:00.

Parameter	Result	Units	Reporting Limit	Client Limit	Qualifiers
Total Tin	< 0.050	MG/L	0.05	N/A	

Carbon, Total Organic Sub **Method:** N/A **Prep. Method:** N/A
Sub-Contracted Result. Please See Attached.

Bromide Sub **Method:** N/A **Prep. Method:** N/A
Sub-Contracted Result. Please See Attached.

Color (ADMI) **Method:** EPA 110.1 **Prep. Method:** N/A
Analyzed by KTL on May 11, 2006 at 12:13.

Parameter	Result	Units	Reporting Limit	Client Limit	Qualifiers
Color (ADMI)	65.0	ADMI	0.1	N/A	

Color (ADMI) (pH 7.6 Adjusted) **Method:** EPA 110.1 **Prep. Method:** N/A
Analyzed by KTL on May 11, 2006 at 12:13.

Parameter	Result	Units	Reporting Limit	Client Limit	Qualifiers
Color (ADMI) (pH 7.6 Adjusted)	65.0	ADMI	0.1	N/A	

Total Cyanide **Method:** EPA 335.4 **Prep. Method:** EPA 335.1
Analyzed by JPM on May 18, 2006 at 14:51. Prepped by JPM on May 18, 2006 at 11:30.

Parameter	Result	Units	Reporting Limit	Client Limit	Qualifiers
Cyanide, Total	< 0.010	mg/L	0.010	N/A	

Chemical Oxygen Demand **Method:** EPA 410.4 **Prep. Method:** N/A
Analyzed by JRV on May 11, 2006 at 06:45.

Parameter	Result	Units	Reporting Limit	Client Limit	Qualifiers
Oxygen Demand, Chemical	1.68	mg/L	1.00	N/A	

Surfactants (MBAS) **Method:** EPA425.1 **Prep. Method:** N/A
Analyzed by KTL on May 11, 2006 at 10:19.

Parameter	Result	Units	Reporting Limit	Client Limit	Qualifiers
Surfactants, Anionic	< 0.200	MG/L	0.2	N/A	

Ammonia Nitrogen **Method:** EPA 350.1 **Prep. Method:** N/A
Analyzed by JPM on May 18, 2006 at 16:19.

Parameter	Result	Units	Reporting Limit	Client Limit	Qualifiers
Nitrogen, Ammonia	< 0.100	mg/L	0.100	N/A	

Total Oil and Grease **Method:** EPA 1664 **Prep. Method:** N/A
Analyzed by KTL on May 12, 2006 at 12:36.

Parameter	Result	Units	Reporting Limit	Client Limit	Qualifiers
Oil & Grease, Total	7.00	MG/L	5	N/A	

Total Phosphorus **Method:** EPA 365.1 **Prep. Method:** EPA365.1
Analyzed by JPM on May 15, 2006 at 11:55. Prepped by JPM on May 14, 2006 at 17:00.

Parameter	Result	Units	Reporting Limit	Client Limit	Qualifiers

EnviroData Group

Microbac

Accredited Lab Data for Today's Environment

Chain of Custody: 46142
Project Name:
Project Number:

Laboratory Sample #: 485484 **Client Sample ID:** 001-Ash Treatment Basin Effluent **Sampled:** 05/09/2006 10:45
Sample Replicate # 1

Total Phosphorus **Method:** EPA 365.1 **Prep. Method:** EPA365.1
Analyzed by JPM on May 15, 2006 at 11:55. Prepped by JPM on May 14, 2006 at 17:00.

Parameter	Result	Units	Reporting Limit	Client Limit	Qualifiers
Phosphorus, Total	0.092	mg/L as P	0.010	N/A	

Total Phenols **Method:** EPA 420.4 **Prep. Method:** EPA 420.4
Analyzed by KTL on May 16, 2006 at 9:57.

Parameter	Result	Units	Reporting Limit	Client Limit	Qualifiers
Phenols	< 0.050	MG/L	0.05	N/A	

Sulfide **Method:** EPA376.2 **Prep. Method:** N/A
Analyzed by KTL on May 11, 2006 at 17:29.

Parameter	Result	Units	Reporting Limit	Client Limit	Qualifiers
Sulfide	0.200	MG/L	0.2	N/A	

Sulfite **Method:** EPA377.1 **Prep. Method:** N/A
Analyzed by JPM on May 10, 2006 at 18:30.

Parameter	Result	Units	Reporting Limit	Client Limit	Qualifiers
Sulfite	2.00	mg/L	2.00	N/A	H

Total Kjeldahl Nitrogen **Method:** EPA 351.2 **Prep. Method:** EPA 351.2
Analyzed by JPM on May 16, 2006 at 17:07. Prepped by JPM on May 14, 2006 at 10:00.

Parameter	Result	Units	Reporting Limit	Client Limit	Qualifiers
Nitrogen, Total Kjeldahl	0.235	mg/L	0.100	N/A	

Total Suspended Solids **Method:** EPA 160.2/160.4 **Prep. Method:** N/A
Analyzed by KTL on May 16, 2006 at 14:00.

Parameter	Result	Units	Reporting Limit	Client Limit	Qualifiers
Solids, Total Suspended	37.0	MG/L	5	N/A	

Nitrogen, Nitrate + Nitrite **Method:** EPA 353.2 **Prep. Method:** N/A
Analyzed by JPM on May 10, 2006 at 23:38.

Parameter	Result	Units	Reporting Limit	Client Limit	Qualifiers
Nitrogen, Nitrate + Nitrite	0.488	mg/L	0.030	N/A	

Laboratory Sample #: 485490 **Client Sample ID:** 001-Ash Treatment Basin Effluent **Sampled:** 05/09/2006 10:45
Sample Replicate # 1

Mercury Sub **Method:** 1631E **Prep. Method:** N/A
Sub-Contracted Result. Please See Attached.

Laboratory Sample #: 485491 **Client Sample ID:** Field Blank **Sampled:** 05/09/2006 10:45
Sample Replicate # 1

Mercury Sub **Method:** 1631E **Prep. Method:** N/A
Sub-Contracted Result. Please See Attached.

EnviroData Group

Accredited Lab Data for Today's Environment

Microbac

Chain of Custody: 46142
Project Name:
Project Number:

All samples were received intact and properly preserved unless otherwise noted.
The results reported relate only to the samples tested.
This report shall not be reproduced except in full, without written approval of this laboratory.

ACCREDITED
Lab#: 100343

Submitted by: Lisa Martin

Client Manager: Lisa Martin
Please contact Lisa Martin with any questions.

Specific tests covered by the A2LA accreditation meet the requirements of the A2LA accreditation standard. Please refer to http://www.envirodatagroup.com/EDG_A2LA_Accredited_Analytes.pdf on our website for a list of our current A2LA accreditations.

EnviroData Group

Microbac

Accredited Lab Data for Today's Environment

Data Qualifiers

Qualifier	Description
A	E. coli present.
A'	E. coli absent.
B	Analyte detected in associated MB.
C	Sample result confirmed.
D	Results reported from dilution.
E	Analyte concentration exceeds calibration range.
F	Unable to analyze due to sample matrix interference.
H	Sample was received or analyzed past the established holding time.
J	Estimated concentration.
K	Sample contained lighter hydrocarbon fractions.
L	Sample contained heavier hydrocarbon fractions.
M	MS and/or MSD recovery outside acceptance limits.
N	Presumptive evidence of analyte present.
O	Sample hydrocarbon pattern does not match calibration standard pattern.
P	Percent difference between primary and secondary column concentrations exceeds acceptance limit.
Q	LCS outside acceptance limits.
R	Data unusable.
S	Surrogate outside acceptance limits on initial and reanalysis.
S'	Surrogates diluted below detection.
T	Sample received improperly preserved.
U	Analyte not detected.
W	Raised quantitation or reporting limit due to limited sample volume.
Y	Replicate/Duplicate precision outside acceptance limits.
Z'	Calibration criteria exceeded but for this situation acceptable by method.
Z	Calibration criteria exceeded.
M'	Result from Method of Standard Additions (MSA).
Q'	LCS/LCD analyzed due to insufficient sample for MS/MSD.

The uncertainty of analytical results can be calculated using the following equation:

$$n = t^*s/1.414$$

where

t=12.706 (Students t value for 95% confidence interval of two replicates)

s= standard deviation of sample and duplicate data

1.414 is square root of the number of replicates (two)

Abbreviations

Laboratory Control Sample	(LCS)
Laboratory Control Duplicate	(LCD)
Matrix Spike	(MS)
Matrix Spike Duplicate	(MSD)
Method Blank	(MB)

Microbac

May 24, 2006

M. Gearheart
Microbac Laboratories
Kentucky Testing Division
3323 Gilmore Ind. Blvd.
Louisville, KY 40213

Work Order No.: ME0605473

RE: LL Hg (1631) analysis

Dear M. Gearheart:

Microbac Laboratories, Inc. received 8 samples on 5/11/2006 8:41:00 PM for the analyses presented in the following report.

The enclosed results were obtained from and are applicable to the sample(s) as received at the laboratory. All sample results are reported on an "as received" basis unless otherwise noted. This report includes the numbered pages as well as the Cooler Inspection Report and Chain of Custody form(s).

All data included in this report have been reviewed and meet the applicable project specific and certification specific requirements, unless otherwise noted. A qualifications page is included in this report and lists the programs under which Microbac maintains certification.

This report shall not be reproduced except in full, without the written approval of Microbac Laboratories.

We appreciate the opportunity to service your analytical needs. If you have any questions, please feel free to contact us.

Sincerely,
Microbac Laboratories, Inc.

Karen A. Ziolkowski
Senior Project Manager

Enclosures

250 West 84th Drive, Merrillville, IN 46410 TEL.800.536.8379 TEL.219.769.8378 FAX.219.769.1664

Microbac

ANALYTICAL RESULTS

Date: *Wednesday, May 24, 2006*

Client:	Microbac Laboratories		
Client Project:	LL Hg (1631) analysis		
Client Sample ID:	485490	***Work Order / ID:***	ME0605473-05A
Sample Description:		***Collection Date:***	05/09/06 00:00
Sample Matrix:	Aqueous	***Date Received:***	05/11/06 20:41

Analyses	ST	Result	RL	Qual	Units	DF	Analyzed
TOTAL METALS Method: **1631E**				Prep Date/Time: **05/15/06 08:00**		Analyst: **TMG**	
Mercury	A	***3.38***	0.500		ng/L	1	05/23/06 20:48
Method Blank, average	A	***ND***	0.400		ng/L	1	05/23/06 20:48

Microbac

ANALYTICAL RESULTS

Date: *Wednesday, May 24, 2006*

Client:	Microbac Laboratories		
Client Project:	LL Hg (1631) analysis		
Client Sample ID:	485491 Blank	***Work Order / ID:***	ME0605473-06A
Sample Description:		***Collection Date:***	05/09/06 00:00
Sample Matrix:	Aqueous	***Date Received:***	05/11/06 20:41

Analyses	ST	Result	RL	Qual	Units	DF	Analyzed
TOTAL METALS Method: **1631E**				Prep Date/Time: **05/15/06 08:00**		Analyst: **TMG**	
Mercury	A	***ND***	0.500		ng/L	1	05/23/06 20:53
Method Blank, average	A	***ND***	0.400		ng/L	1	05/23/06 20:53

Microbac

FLAGS, FOOTNOTES AND ABBREVIATIONS (as needed)

NA	=	Not Analyzed	N/A	=	Not Applicable			
mg/L	=	Milligrams per Liter (ppm)	ug/L	=	Micrograms per Liter (ppb)	cfu	=	Colony Forming Unit
mg/Kg	=	Milligrams per Kilogram (ppm)	ug/Kg	=	Micrograms per Kilogram (ppb)	ng/L	=	Nanograms per Liter (ppt)

U	=	Undetected
J	=	Analyte concentration detected between RL and MDL (Metals / Organics)
B	=	Detected in the associated Method Blank at a concentration above the routine PQL/RL
b	=	Detected in the associated Method Blank at a concentration above the Method Detection Limit but less than the routine PQL/RL
D	=	Surrogate recoveries are not calculated due to sample dilution
ND	=	Not Detected at the Reporting Limit (or the Method Detection Limit, if listed)
E	=	Value above quantitation range
H	=	Analyte was prepared and/or analyzed outside of the analytical method holding time
I	=	Matrix Interference
R	=	RPD outside accepted recovery limits
S	=	Spike recovery outside recovery limits
Surr	=	Surrogate

DF = Dilution Factor RL = Reporting Limit ST = Sample Type MDL = Method Detection Limit

SAMPLE TYPES

A	=	Analyte
I	=	Internal Standard
S	=	Surrogate
T	=	Tentatively Identified Compound (TIC, concentration estimated)

QC SAMPLE IDENTIFICATIONS

MBLK	=	Method Blank	ICSA	=	Interference Check Standard "A"	OPR	=	Ongoing Precision and Recovery Standard
DUP	=	Method Duplicate	ICSAB	=	Interference Check Standard "AB"			
LCS	=	Laboratory Control Sample	LCSD	=	Laboratory Control Sample Duplicate			
MS	=	Matrix Spike	MSD	=	Matrix Spike Duplicate			
ICB	=	Initial Calibration Blank	CCB	=	Continuing Calibration Blank			
ICV	=	Initial Calibration Verification	CCV	=	Continuing Calibration Verification			
PDS	=	Post Digestion Spike	SD	=	Serial Dilution			

CERTIFICATIONS

Below is a list of certifications maintained by the Microbac Merrillville Laboratory. All data included in this report has been reviewed for and meets all project specific and quality control requirements of the applicable accreditation, unless otherwise noted. Complete lists of individual analytes pursuant to each certification below are available upon request.

- Illinois EPA for the analysis wastewater and solid waste in accordance with the requirements of the National Environmental Laboratory Accreditation Program [NELAP] (accreditation #100435)
- Illinois Department of Public Health for the microbiological analysis of drinking water (registry #175458)
- Indiana DEM approved support laboratory for solid waste and wastewater analyses
- Indiana SDH for the chemical analysis of drinking water (lab #C-45-02)
- Indiana SDH for the microbiological analysis of drinking water (lab #M-45-08)
- Kentucky EPPC for the analysis of samples applicable to the Underground Storage Tank program (lab #0061)
- North Carolina DENR for the environmental analysis for NPDES effluent, surface water, groundwater, and pretreatment regulations (certificate #597)
- Wisconsin DNR for the chemical analysis of wastewater and solid waste (lab #998036710)

MICROBAC LOCATIONS

Corporate	-	Wexford, PA	**Camp Hill Division**	-	Camp Hill, PA
Pittsburgh Division	-	Warrendale, PA	**Knoxville Division**	-	Maryville, TN
Erie Division	-	Erie, PA / Wilkes-Barre, PA	**Venice Division**	-	Venice, FL / Fort Myers, FL
New Castle Division	-	New Castle, PA	**South Carolina Division**	-	New Ellenton, SC
Kentucky Testing Division	-	Louisville, KY / Evansville, IN	**Fayetteville Division**	-	Fayetteville, NC
Massachusetts Division	-	Marlboro, MA	**Southern Testing Division**	-	Wilson, NC
Gascoyne Division	-	Baltimore, MD	**Hauser Division**	-	Boulder, CO
Corona Division	-	Corona, CA	**Friend Laboratory**	-	Waverly, NY
South Jersey Division	-	Turnersville, NJ			

250 West 84th Drive, Merrillville, IN 46410 TEL.800.536.8379 TEL.219.769.8378 FAX.219.769.1664

Microbac

COOLER INSPECTION

Date: Wednesday, May 24, 2006

Client Name **MICROBAC - KY**

Work Order Number **ME0605473**

Checklist completed b SM | 5/11/2006 10:49:24 PM

Date / Time Received: **5/11/2006 8:41:00 PM**

Received by SM

Reviewed by KZ | 5/12/2006 9:48:06 AM

Carrier name UPS

After-Hour Arrival?	Yes ☐	No ☑	
Shipping container/cooler in good condition?	Yes ☑	No ☐	Not Present ☐
Custody seals intact on shippping container/cooler?	Yes ☐	No ☐	Not Present ☑
Custody seals intact on sample bottles?	Yes ☐	No ☐	Not Present ☑
Chain of custody present?	Yes ☑	No ☐	
Chain of custody included sufficient client identification?	Yes ☑	No ☐	
Chain of custody included sufficient sample collector information?	Yes ☑	No ☐	
Chain of custody included a sample description?	Yes ☑	No ☐	
Chain of custody agrees with sample labels?	Yes ☑	No ☐	
Chain of custody identified the appropriate matrix?	Yes ☑	No ☐	
Chain of custody included date of collection?	Yes ☑	No ☐	
Chain of custody included time of collection?	Yes ☐	No ☑	
Chain of custody identified the appropriate number of containers?	Yes ☑	No ☐	
Samples in proper container/bottle?	Yes ☑	No ☐	
Sample containers intact?	Yes ☑	No ☐	
Sufficient sample volume for indicated test?	Yes ☑	No ☐	
All samples received within holding time?	Yes ☑	No ☐	
Chain of custody identified the appropriate preservatives?	Yes ☐	No ☑	
Samples properly preserved?	Yes ☑	No ☐	

If No, adjusted by? _____ Date/Time _____

Chain of custody included the requested analyses?	Yes ☑	No ☐
Chain of custody signed when relinquished and received?	Yes ☑	No ☐
Samples received on ice?	Yes ☑	No ☐

Container/Temp Blank temperature Temp: On Ice

VOA vials have zero headspace? No VOA vials submitted ☑ Yes ☐ No ☐

ANY "NO" EVALUATION (excluding After-Hour Receipt) REQUIRES CLIENT NOTIFICATION.

General Comments:

Sample ID	Client Sample ID	Comments
ME0605473-01A	485504	485504
ME0605473-02A	485505 Blank	485505
ME0605473-03A	485507	485507
ME0605473-04A	485508 Blank	485508
ME0605473-05A	485490	485490
ME0605473-06A	485491 Blank	485491
ME0605473-07A	485493	485493
ME0605473-08A	485494 Blank	485494

250 West 84th Drive, Merrillville, IN 46410 TEL.800.536.8379 TEL.219.769.8378 FAX.219.769.1664

Microbac Laboratories, Inc.

CAMP HILL DIVISION
209 Senate Ave, Suite 105
Camp Hill, PA 17011
(717) 763-0582 Fax (717) 214-1269
Cherie Casari, Lab Director
www.microbac.com E-Mail: camphill@microbac.com

STATE CERT ID.
PA# 21-133
NY# 11650
EPA# PA00028

CHEMISTRY · MICROBIOLOGY · FOOD SAFETY · CONSUMER PRODUCTS
WATER · AIR · WASTES · FOOD · PHARMACEUTICALS · NUTRACEUTICALS

CERTIFICATE OF ANALYSIS

MICROBAC KENTUCKY TESTING IAB
SEAN HYDE
3323 GILMORE INDUSTRIAL BLVD
LOUISVILLE,KY 40213

Date Reported	5/17/2006
Date Received	5/11/2006
Sample ID	0605-00823
Invoice No.	64238
Cust #	009905
Cust P.O. #	
Cust Permit #	

Subject 485484

Sampled By: Date 5/9/2006 Time

Test	Result	Date	Time	Tech	Method
001 485484					
TOTAL ORGANIC CARBON	1.4 mg/L	5/15/2006		RWS	SM 19 5310C
TEMP RECD	3 C	5/9/2006		EAP	
Sample Properly Preserved?	YES	5/9/2006		EAP	

Respectfully Submitted:

Microbac Laboratories, Inc.

The data and information on this, and other accompanying documents, represent only the sample(s) analyzed and is rendered upon condition that it is not to be reporduced wholly or in part for advertising or other purposes without approval from the laboratory.
USDA-EPA-NIOSH Testing Food Sanitation Consulting Chemical and Microbiological Analyses and Research

MEMBER ACIL

EnviroData Group
Accredited Lab Data for Today's Environment

Microbac

2520 Regency Rd.
Lexington, KY 40503
Phone: 859-276-3506
Toll Free: 800-489-3506
Fax: 859-278-5665
E-mail: info@envirodatagroup.com

Analytical Results

Kentucky Utilities Company
Attn: Mr. Roger Medina
"LG&E Energy, Env. Affiars"
220 West Main
Louisville, KY 40232

Chain of Custody: 46143
Project Name:
Project Number:
Report Reference:46143-20060526143912

cc:

Date/Time Received: 05/09/2006 14:00
Temperature Upon Receipt: 3 C

Collector: M-JRH
Client Manager: Lisa Martin

Laboratory Sample #: 485492 **Client Sample ID:** 002-Cooling Tower Blowdown **Sampled:** 05/09/2006 10:00
Sample Replicate # 1

Biochemical Oxygen Demand-Carbonaceous **Method:** EPA 405.1 **Prep. Method:** N/A
Analyzed by JRV on May 10, 2006 at 08:00.

Parameter	Result	Units	Reporting Limit	Client Limit	Qualifiers
Oxygen Demand, Biochemical, 5-Day/	< 2.00	mg/L	2.00	N/A	

Organic Nitrogen **Method:** EPA351.2/350.1 **Prep. Method:** CALC
Analyzed by CALC on May 18, 2006 at 16:21.

Parameter	Result	Units	Reporting Limit	Client Limit	Qualifiers
Nitrogen, Organic	0.423	mg/L	0.100	N/A	

Total Hardness **Method:** SM 2340B **Prep. Method:** CALC
Analyzed by CALC on May 24, 2006 at 17:41.

Parameter	Result	Units	Reporting Limit	Client Limit	Qualifiers
Hardness, Total	244	mg/L CaCO3	1.25	N/A	

pH (Field) **Method:** EPA150.1/SW9045 **Prep. Method:** N/A
Analyzed by FIELD on May 09, 2006 at 10:00.

Parameter	Result	Units	Reporting Limit	Client Limit	Qualifiers
pH (Field)	8.21	S.U.	N/A	N/A	

Temperature (Field) **Method:** EPA170.1 **Prep. Method:** N/A
Analyzed by FIELD on May 09, 2006 at 10:00.

Parameter	Result	Units	Reporting Limit	Client Limit	Qualifiers
Temperature (Field)	29.6	Celsius	N/A	N/A	

Flow (Field) **Method:** **Prep. Method:** N/A
Analyzed by FIELD on May 09, 2006 at 10:00.

Parameter	Result	Units	Reporting Limit	Client Limit	Qualifiers
Flow (Client)	0.007	MGD	N/A	N/A	

Inorganic Anions **Method:** EPA 300 **Prep. Method:** N/A
Analyzed by KTL on May 16, 2006 at 9:31.

Parameter	Result	Units	Reporting Limit	Client Limit	Qualifiers
Fluoride	0.560	MG/L	0.05	N/A	
Chloride	14.0	MG/L	0.05	N/A	
Sulfate	83.0	MG/L	0.02	N/A	

Results reported on a Wet Weight Basis

Issued: 5/26/2006

EnviroData Group

Microbac

Accredited Lab Data for Today's Environment

Chain of Custody: 46143
Project Name:
Project Number:

Laboratory Sample #: 485492 **Client Sample ID:** 002-Cooling Tower Blowdown **Sampled:** 05/09/2006 10:00
Sample Replicate # 1

Volatile Organics **Method:** EPA624 **Prep. Method:** N/A
Analyzed by KRS on May 10, 2006 at 09:54.

Parameter	Result	Units	Reporting Limit	Client Limit	Qualifiers
1,2-Dichloroethane-d4	150	% Recovery		N/A	S
d8-Toluene	104	% Recovery		N/A	
4-Bromofluorobenzene	91	% Recovery		N/A	
Chloromethane	< 0.0050	mg/L	0.0050	N/A	
Bromomethane	< 0.0050	mg/L	0.0050	N/A	
Vinyl Chloride	< 0.0050	mg/L	0.0050	N/A	
Chloroethane	< 0.0050	mg/L	0.0050	N/A	
Acrolein	< 0.010	mg/L	0.010	N/A	
Methylene Chloride	< 0.0050	mg/L	0.0050	N/A	
Trichlorofluoromethane	< 0.0050	mg/L	0.0050	N/A	
1,1-Dichloroethene	< 0.0050	mg/L	0.0050	N/A	
Methyl tert-butyl ether	< 0.0050	mg/L	0.0050	N/A	
1,1-Dichloroethane	< 0.0050	mg/L	0.0050	N/A	
Acrylonitrile	< 0.0050	mg/L	0.0050	N/A	
trans-1;2-Dichloroethene	< 0.0050	mg/L	0.0050	N/A	
Chloroform	< 0.0050	mg/L	0.0050	N/A	
1,2-Dichloroethane	< 0.0050	mg/L	0.0050	N/A	
1,1,1-Trichloroethane	< 0.0050	mg/L	0.0050	N/A	
Carbon Tetrachloride	< 0.0050	mg/L	0.0050	N/A	
Bromodichloromethane	< 0.0050	mg/L	0.0050	N/A	
1,2-Dichloropropane	< 0.0050	mg/L	0.0050	N/A	
2-Chloroethylvinyl ether	< 0.010	mg/L	0.010	N/A	
cis-1,3-Dichloropropene	< 0.0050	mg/L	0.0050	N/A	
Trichloroethene	< 0.0050	mg/L	0.0050	N/A	
Benzene	< 0.0050	mg/L	0.0050	N/A	
Dibromochloromethane	< 0.0050	mg/L	0.0050	N/A	
trans-1,3-Dichloropropene	< 0.0050	mg/L	0.0050	N/A	
1,1,2-Trichloroethane	< 0.0050	mg/L	0.0050	N/A	
Bromoform	< 0.0050	mg/L	0.0050	N/A	
Tetrachloroethene	< 0.0050	mg/L	0.0050	N/A	
1,1,2,2-Tetrachloroethane	< 0.0050	mg/L	0.0050	N/A	
Toluene	< 0.0050	mg/L	0.0050	N/A	
Chlorobenzene	< 0.0050	mg/L	0.0050	N/A	
Ethylbenzene	< 0.0050	mg/L	0.0050	N/A	
m/p Xylenes	< 0.010	mg/L	0.010	N/A	
1,3-Dichlorobenzene	< 0.0050	mg/L	0.0050	N/A	
1,4-Dichlorobenzene	< 0.0050	mg/L	0.0050	N/A	
1,2-Dichlorobenzene	< 0.0050	mg/L	0.0050	N/A	
Naphthalene	< 0.0050	mg/L	0.0050	N/A	
Xylenes	< 0.015	mg/L	0.015	N/A	

Semivolatile Organics **Method:** EPA625 **Prep. Method:** EPA 625
Analyzed by KTL on May 16, 2006 at 23:00.

Parameter	Result	Units	Reporting Limit	Client Limit	Qualifiers

EnviroData Group

Microbac

Accredited Lab Data for Today's Environment

Chain of Custody: 46143
Project Name:
Project Number:

Laboratory Sample #: 485492 **Client Sample ID:** 002-Cooling Tower Blowdown **Sampled:** 05/09/2006 10:00
Sample Replicate # 1

Semivolatile Organics **Method:** EPA625 **Prep. Method:** EPA 625

Analyzed by KTL on May 16, 2006 at 23:00.

Parameter	Result	Units	Reporting Limit	Client Limit	Qualifiers
2,4,5-Trichlorophenol		mg/L	0.01	N/A	
2-Fluorophenol	64	% Recovery		N/A	
Phenol-d5		% Recovery		N/A	
Nitrobenzene-d5	56	% Recovery		N/A	
2-Fluorobiphenyl	64	% Recovery		N/A	
2,4,6-Tribromophenol	44	% Recovery		N/A	
N-Nitrosodimethylamine	< 0.010	MG/L	0.01	N/A	
Bis(2-Chloroethyl)Ether	< 0.010	MG/L	0.01	N/A	
Phenol	< 0.010	MG/L	0.01	N/A	
2-Chlorophenol	< 0.010	MG/L	0.01	N/A	
1,3-Dichlorobenzene	< 0.010	MG/L	0.01	N/A	
1,4-Dichlorobenzene	< 0.010	MG/L	0.01	N/A	
1,2-Dichlorobenzene	< 0.010	MG/L	0.01	N/A	
Bis(2-Chloroisopropyl)Ether	< 0.010	MG/L	0.01	N/A	
Hexachloroethane	< 0.010	MG/L	0.01	N/A	
N-Nitroso-Di-n-Propylamine	< 0.010	MG/L	0.01	N/A	
Nitrobenzene	< 0.010	MG/L	0.01	N/A	
Isophorone	< 0.010	MG/L	0.01	N/A	
2-Nitrophenol	< 0.010	MG/L	0.01	N/A	
2,4-Dimethylphenol	< 0.010	MG/L	0.01	N/A	
Bis(2-chloroethoxy)methane	< 0.010	MG/L	0.01	N/A	
2,4-Dichlorophenol	< 0.010	MG/L	0.01	N/A	
1,2,4-Trichlorobenzene	< 0.010	MG/L	0.01	N/A	
Naphthalene	< 0.010	MG/L	0.01	N/A	
Hexachlorobutadiene	< 0.010	MG/L	0.01	N/A	
4-Chloro-3-Methylphenol	< 0.010	MG/L	0.01	N/A	
Hexachlorocyclopentadiene	< 0.010	MG/L	0.01	N/A	
2,4,6-Trichlorophenol	< 0.010	MG/L	0.01	N/A	
2-Chloronaphthalene	< 0.010	MG/L	0.01	N/A	
Acenaphthylene	< 0.010	MG/L	0.01	N/A	
Dimethylphthalate	< 0.010	MG/L	0.01	N/A	
2,6-Dinitrotoluene	< 0.010	MG/L	0.01	N/A	
Acenaphthene	< 0.010	MG/L	0.01	N/A	
2,4-Dinitrophenol	< 0.010	MG/L	0.01	N/A	
2,4-Dinitrotoluene	< 0.010	MG/L	0.01	N/A	
4-Nitrophenol	< 0.010	MG/L	0.01	N/A	
Fluorene	< 0.010	MG/L	0.01	N/A	
4-Chlorophenyl-Phenylether	< 0.010	MG/L	0.01	N/A	
Diethylphthalate	< 0.010	MG/L	0.01	N/A	
2-Methyl-4,6-Dinitrophenol	< 0.010	MG/L	0.01	N/A	
N-Nitrosodiphenylamine	< 0.010	MG/L	0.01	N/A	
4-Bromophenyl-Phenylether	< 0.010	MG/L	0.01	N/A	
Hexachlorobenzene	< 0.010	MG/L	0.01	N/A	
Pentachlorophenol	< 0.010	MG/L	0.01	N/A	

Results reported on a Wet Weight Basis

Issued: 5/26/2006

EnviroData Group

Microbac

Accredited Lab Data for Today's Environment

Chain of Custody: 46143
Project Name:
Project Number:

Laboratory Sample #: 485492 **Client Sample ID:** 002-Cooling Tower Blowdown **Sampled:** 05/09/2006 10:00
Sample Replicate # 1

Semivolatile Organics **Method:** EPA625 **Prep. Method:** EPA 625

Analyzed by KTL on May 16, 2006 at 23:00.

Parameter	Result	Units	Reporting Limit	Client Limit	Qualifiers
Phenanthrene	< 0.010	MG/L	0.01	N/A	
Anthracene	< 0.010	MG/L	0.01	N/A	
Di-n-Butylphthalate	< 0.010	MG/L	0.01	N/A	
Fluoranthene	< 0.010	MG/L	0.01	N/A	
Benzidene	< 0.010	MG/L	0.01	N/A	
Butylbenzylphthalate	< 0.010	MG/L	0.01	N/A	
3,3-Dichlorobenzidine	< 0.010	MG/L	0.01	N/A	
Benzo(a)Anthracene	< 0.010	MG/L	0.01	N/A	
Chrysene	< 0.010	MG/L	0.01	N/A	
Bis(2-Ethylhexyl)Phthalate	< 0.010	MG/L	0.01	N/A	
Di-n-Octylphthalate	< 0.010	MG/L	0.01	N/A	
Benzo(b)Fluoranthene	< 0.010	MG/L	0.01	N/A	
Benzo(k)Fluoranthene	< 0.010	MG/L	0.01	N/A	
Benzo(a)Pyrene	< 0.010	MG/L	0.01	N/A	
Indeno(1,2,3-cd)Pyrene	< 0.010	MG/L	0.01	N/A	
Dibenzo(a,h)Anthracene	< 0.010	MG/L	0.01	N/A	
Benzo(g,h,i)Perylene	< 0.010	MG/L	0.01	N/A	
Pyrene	< 0.010	MG/L	0.01	N/A	

Total Metals **Method:** EPA200.7 **Prep. Method:** EPA 200.7

Analyzed by KTL on May 12, 2006 at 0:00.

Parameter	Result	Units	Reporting Limit	Client Limit	Qualifiers
Total Aluminum	< 1.00	MG/L	1	N/A	
Total Antimony	< 0.020	MG/L	0.01	N/A	
Total Arsenic	< 0.100	MG/L	0.1	N/A	
Total Barium	0.050	MG/L	0.01	N/A	
Total Beryllium	< 0.010	MG/L	0.01	N/A	
Total Boron	< 0.500	MG/L	0.5	N/A	
Total Cadmium	< 0.010	MG/L	0.01	N/A	
Total Calcium	74.1	MG/L	0.5	N/A	
Total Chromium	< 0.010	MG/L	0.01	N/A	
Total Cobalt	< 0.010	MG/L	0.01	N/A	
Total Copper	0.040	MG/L	0.01	N/A	
Total Iron	< 0.050	MG/L	0.05	N/A	
Total Lead	< 0.010	MG/L	0.01	N/A	
Total Magnesium	14.2	MG/L	0.1	N/A	
Total Manganese	< 0.010	MG/L	0.01	N/A	
Total Molybdenum	< 0.020	MG/L	0.02	N/A	
Total Nickel	< 0.010	MG/L	0.01	N/A	
Total Selenium	< 0.100	MG/L	0.1	N/A	
Total Silver	< 0.010	MG/L	0.01	N/A	
Total Thallium	< 0.050	MG/L	0.05	N/A	
Total Titanium	< 0.010	MG/L	0.01	N/A	
Total Zinc	< 0.010	MG/L	0.01	N/A	

Results reported on a Wet Weight Basis

Issued: 5/26/2006

EnviroData Group

Microbac

Accredited Lab Data for Today's Environment

Chain of Custody: 46143
Project Name:
Project Number:

Laboratory Sample #: 485492 **Client Sample ID:** 002-Cooling Tower Blowdown **Sampled:** 05/09/2006 10:00
Sample Replicate # 1

Total Metals **Method:** EPA200.7 **Prep. Method:** EPA 200.7
Analyzed by KTL on May 12, 2006 at 0:00.

Parameter	Result	Units	Reporting Limit	Client Limit	Qualifiers
Total Tin	< 0.050	MG/L	0.05	N/A	

Carbon, Total Organic Sub **Method:** N/A **Prep. Method:** N/A
Sub-Contracted Result. Please See Attached.

Bromide Sub **Method:** N/A **Prep. Method:** N/A
Sub-Contracted Result. Please See Attached.

Color (ADMI) **Method:** EPA 110.1 **Prep. Method:** N/A
Analyzed by KTL on May 11, 2006 at 12:13.

Parameter	Result	Units	Reporting Limit	Client Limit	Qualifiers
Color (ADMI)	27.0	ADMI	0.1	N/A	

Color (ADMI) (pH 7.6 Adjusted) **Method:** EPA 110.1 **Prep. Method:** N/A
Analyzed by KTL on May 11, 2006 at 12:13.

Parameter	Result	Units	Reporting Limit	Client Limit	Qualifiers
Color (ADMI) (pH 7.6 Adjusted)	28.0	ADMI	0.1	N/A	

Total Cyanide **Method:** EPA 335.4 **Prep. Method:** EPA 335.1
Analyzed by JPM on May 18, 2006 at 14:53. Prepped by JPM on May 18, 2006 at 11:30.

Parameter	Result	Units	Reporting Limit	Client Limit	Qualifiers
Cyanide, Total	< 0.010	mg/L	0.010	N/A	

Chemical Oxygen Demand **Method:** EPA 410.4 **Prep. Method:** N/A
Analyzed by JRV on May 11, 2006 at 06:45.

Parameter	Result	Units	Reporting Limit	Client Limit	Qualifiers
Oxygen Demand, Chemical	1.53	mg/L	1.00	N/A	

Surfactants (MBAS) **Method:** EPA425.1 **Prep. Method:** N/A
Analyzed by KTL on May 11, 2006 at 10:19.

Parameter	Result	Units	Reporting Limit	Client Limit	Qualifiers
Surfactants, Anionic	< 0.200	MG/L	0.2	N/A	

Ammonia Nitrogen **Method:** EPA 350.1 **Prep. Method:** N/A
Analyzed by JPM on May 18, 2006 at 16:21.

Parameter	Result	Units	Reporting Limit	Client Limit	Qualifiers
Nitrogen, Ammonia	< 0.100	mg/L	0.100	N/A	

Total Oil and Grease **Method:** EPA 1664 **Prep. Method:** N/A
Analyzed by KTL on May 12, 2006 at 12:36.

Parameter	Result	Units	Reporting Limit	Client Limit	Qualifiers
Oil & Grease, Total	< 5.00	MG/L	5	N/A	

Total Phosphorus **Method:** EPA 365.1 **Prep. Method:** EPA365.1
Analyzed by JPM on May 15, 2006 at 11:57. Prepped by JPM on May 14, 2006 at 17:00.

Parameter	Result	Units	Reporting Limit	Client Limit	Qualifiers

EnviroData Group

Microbac

Accredited Lab Data for Today's Environment

Chain of Custody: 46143
Project Name:
Project Number:

Laboratory Sample #: 485492 **Client Sample ID:** 002-Cooling Tower Blowdown **Sampled:** 05/09/2006 10:00
Sample Replicate # 1

Total Phosphorus **Method:** EPA 365.1 **Prep. Method:** EPA365.1
Analyzed by JPM on May 15, 2006 at 11:57. Prepped by JPM on May 14, 2006 at 17:00.

Parameter	Result	Units	Reporting Limit	Client Limit	Qualifiers
Phosphorus, Total	0.336	mg/L as P	0.010	N/A	

Total Phenols **Method:** EPA 420.4 **Prep. Method:** EPA 420.4
Analyzed by KTL on May 16, 2006 at 9:57.

Parameter	Result	Units	Reporting Limit	Client Limit	Qualifiers
Phenols	0.050	MG/L	0.05	N/A	

Sulfide **Method:** EPA376.2 **Prep. Method:** N/A
Analyzed by KTL on May 11, 2006 at 17:29.

Parameter	Result	Units	Reporting Limit	Client Limit	Qualifiers
Sulfide	0.300	MG/L	0.2	N/A	

Sulfite **Method:** EPA377.1 **Prep. Method:** N/A
Analyzed by JPM on May 10, 2006 at 18:30.

Parameter	Result	Units	Reporting Limit	Client Limit	Qualifiers
Sulfite	2.00	mg/L	2.00	N/A	H

Total Kjeldahl Nitrogen **Method:** EPA 351.2 **Prep. Method:** EPA 351.2
Analyzed by JPM on May 16, 2006 at 17:08. Prepped by JPM on May 14, 2006 at 10:00.

Parameter	Result	Units	Reporting Limit	Client Limit	Qualifiers
Nitrogen, Total Kjeldahl	0.423	mg/L	0.100	N/A	

Total Suspended Solids **Method:** EPA 160.2/160.4 **Prep. Method:** N/A
Analyzed by KTL on May 16, 2006 at 14:00.

Parameter	Result	Units	Reporting Limit	Client Limit	Qualifiers
Solids, Total Suspended	< 5.00	MG/L	5	N/A	

Nitrogen, Nitrate + Nitrite **Method:** EPA 353.2 **Prep. Method:** N/A
Analyzed by JPM on May 10, 2006 at 23:44.

Parameter	Result	Units	Reporting Limit	Client Limit	Qualifiers
Nitrogen, Nitrate + Nitrite	1.51	mg/L	0.030	N/A	

Laboratory Sample #: 485493 **Client Sample ID:** 002-Cooling Tower Blowdown **Sampled:** 05/09/2006 10:00
Sample Replicate # 1

Mercury Sub **Method:** 1631E **Prep. Method:** N/A
Sub-Contracted Result. Please See Attached.

Laboratory Sample #: 485494 **Client Sample ID:** Field Blank **Sampled:** 05/09/2006 10:00
Sample Replicate # 1

Mercury Sub **Method:** 1631E **Prep. Method:** N/A
Sub-Contracted Result. Please See Attached.

EnviroData Group

Accredited Lab Data for Today's Environment

Microbac

Chain of Custody: 46143
Project Name:
Project Number:

All samples were received intact and properly preserved unless otherwise noted.
The results reported relate only to the samples tested.
This report shall not be reproduced except in full, without written approval of this laboratory.

ACCREDITED
Lab#: 100343

Submitted by: Lisa Martin

Client Manager: Lisa Martin
Please contact Lisa Martin with any questions.

Specific tests covered by the A2LA accreditation meet the requirements of the A2LA accreditation standard. Please refer to http://www.envirodatagroup.com/EDG_A2LA_Accredited_Analytes.pdf on our website for a list of our current A2LA accreditations.

EnviroData Group

Microbac

Accredited Lab Data for Today's Environment

Data Qualifiers

Qualifier	Description
A	E. coli present.
A'	E. coli absent.
B	Analyte detected in associated MB.
C	Sample result confirmed.
D	Results reported from dilution.
E	Analyte concentration exceeds calibration range.
F	Unable to analyze due to sample matrix interference.
H	Sample was received or analyzed past the established holding time.
I	Estimated concentration.
K	Sample contained lighter hydrocarbon fractions.
L	Sample contained heavier hydrocarbon fractions.
M	MS and/or MSD recovery outside acceptance limits.
N	Presumptive evidence of analyte present.
O	Sample hydrocarbon pattern does not match calibration standard pattern.
P	Percent difference between primary and secondary column concentrations exceeds acceptance limit.
Q	LCS outside acceptance limits.
R	Data unusable.
S	Surrogate outside acceptance limits on initial and reanalysis.
S'	Surrogates diluted below detection.
T	Sample received improperly preserved.
U	Analyte not detected.
W	Raised quantitation or reporting limit due to limited sample volume.
Y	Replicate/Duplicate precision outside acceptance limits.
Z'	Calibration criteria exceeded but for this situation acceptable by method.
Z	Calibration criteria exceeded.
M'	Result from Method of Standard Additions (MSA).
Q'	LCS/LCD analyzed due to insufficient sample for MS/MSD.

The uncertainty of analytical results can be calculated using the following equation:

$$n = t^*s/1.414$$

where

t=12.706 (Students t value for 95% confidence interval of two replicates)

s= standard deviation of sample and duplicate data

1.414 is square root of the number of replicates (two)

Abbreviations

Laboratory Control Sample	(LCS)
Laboratory Control Duplicate	(LCD)
Matrix Spike	(MS)
Matrix Spike Duplicate	(MSD)
Method Blank	(MB)

Microbac

May 24, 2006

M. Gearheart
Microbac Laboratories
Kentucky Testing Division
3323 Gilmore Ind. Blvd.
Louisville, KY 40213

Work Order No.: ME0605473

RE: LL Hg (1631) analysis

Dear M. Gearheart:

Microbac Laboratories, Inc. received 8 samples on 5/11/2006 8:41:00 PM for the analyses presented in the following report.

The enclosed results were obtained from and are applicable to the sample(s) as received at the laboratory. All sample results are reported on an "as received" basis unless otherwise noted. This report includes the numbered pages as well as the Cooler Inspection Report and Chain of Custody form(s).

All data included in this report have been reviewed and meet the applicable project specific and certification specific requirements, unless otherwise noted. A qualifications page is included in this report and lists the programs under which Microbac maintains certification.

This report shall not be reproduced except in full, without the written approval of Microbac Laboratories.

We appreciate the opportunity to service your analytical needs. If you have any questions, please feel free to contact us.

Sincerely,
Microbac Laboratories, Inc.

Karen A. Ziolkowski
Senior Project Manager

Enclosures

250 West 84th Drive, Merrillville, IN 46410 TEL.800.536.8379 TEL.219.769.8378 FAX.219.769.1664

Microbac

ANALYTICAL RESULTS

Date: *Wednesday, May 24, 2006*

Client:	Microbac Laboratories		
Client Project:	LL Hg (1631) analysis		
Client Sample ID:	485493	***Work Order / ID:***	ME0605473-07A
Sample Description:		***Collection Date:***	05/09/06 00:00
Sample Matrix:	Aqueous	***Date Received:***	05/11/06 20:41

Analyses	ST	Result	RL	Qual	Units	DF	Analyzed
TOTAL METALS Method: **1631E**				Prep Date/Time: **05/15/06 08:00**		Analyst: **TMG**	
Mercury	A	***1.21***	0.500		ng/L	1	05/23/06 20:59
Method Blank, average	A	***ND***	0.400		ng/L	1	05/23/06 20:59

Microbac

ANALYTICAL RESULTS

Date: *Wednesday, May 24, 2006*

Client:	Microbac Laboratories		
Client Project:	LL Hg (1631) analysis		
Client Sample ID:	485494 Blank	***Work Order / ID:***	ME0605473-08A
Sample Description:		***Collection Date:***	05/09/06 00:00
Sample Matrix:	Aqueous	***Date Received:***	05/11/06 20:41

Analyses	ST	Result	RL	Qual	Units	DF	Analyzed
TOTAL METALS Method: **1631E**				Prep Date/Time: **05/15/06 08:00**		Analyst: **TMG**	
Mercury	A	***1.12***	0.500		ng/L	1	05/23/06 21:12
Method Blank, average	A	***ND***	0.400		ng/L	1	05/23/06 21:12

Microbac

FLAGS, FOOTNOTES AND ABBREVIATIONS (as needed)

NA	=	Not Analyzed	N/A	=	Not Applicable			
mg/L	=	Milligrams per Liter (ppm)	ug/L	=	Micrograms per Liter (ppb)	cfu	=	Colony Forming Unit
mg/Kg	=	Milligrams per Kilogram (ppm)	ug/Kg	=	Micrograms per Kilogram (ppb)	ng/L	=	Nanograms per Liter (ppt)

U	=	Undetected
J	=	Analyte concentration detected between RL and MDL (Metals / Organics)
B	=	Detected in the associated Method Blank at a concentration above the routine PQL/RL
b	=	Detected in the associated Method Blank at a concentration above the Method Detection Limit but less than the routine PQL/RL
D	=	Surrogate recoveries are not calculated due to sample dilution
ND	=	Not Detected at the Reporting Limit (or the Method Detection Limit, if listed)
E	=	Value above quantitation range
H	=	Analyte was prepared and/or analyzed outside of the analytical method holding time
I	=	Matrix Interference
R	=	RPD outside accepted recovery limits
S	=	Spike recovery outside recovery limits
Surr	=	Surrogate

DF = Dilution Factor RL = Reporting Limit ST = Sample Type MDL = Method Detection Limit

SAMPLE TYPES

A	=	Analyte
I	=	Internal Standard
S	=	Surrogate
T	=	Tentatively Identified Compound (TIC, concentration estimated)

QC SAMPLE IDENTIFICATIONS

MBLK	=	Method Blank	ICSA	=	Interference Check Standard "A"	OPR	=	Ongoing Precision and Recovery Standard
DUP	=	Method Duplicate	ICSAB	=	Interference Check Standard "AB"			
LCS	=	Laboratory Control Sample	LCSD	=	Laboratory Control Sample Duplicate			
MS	=	Matrix Spike	MSD	=	Matrix Spike Duplicate			
ICB	=	Initial Calibration Blank	CCB	=	Continuing Calibration Blank			
ICV	=	Initial Calibration Verification	CCV	=	Continuing Calibration Verification			
PDS	=	Post Digestion Spike	SD	=	Serial Dilution			

CERTIFICATIONS

Below is a list of certifications maintained by the Microbac Merrillville Laboratory. All data included in this report has been reviewed for and meets all project specific and quality control requirements of the applicable accreditation, unless otherwise noted. Complete lists of individual analytes pursuant to each certification below are available upon request.

- Illinois EPA for the analysis wastewater and solid waste in accordance with the requirements of the National Environmental Laboratory Accreditation Program [NELAP] (accreditation #100435)
- Illinois Department of Public Health for the microbiological analysis of drinking water (registry #175458)
- Indiana DEM approved support laboratory for solid waste and wastewater analyses
- Indiana SDH for the chemical analysis of drinking water (lab #C-45-02)
- Indiana SDH for the microbiological analysis of drinking water (lab #M-45-08)
- Kentucky EPPC for the analysis of samples applicable to the Underground Storage Tank program (lab #0061)
- North Carolina DENR for the environmental analysis for NPDES effluent, surface water, groundwater, and pretreatment regulations (certificate #597)
- Wisconsin DNR for the chemical analysis of wastewater and solid waste (lab #998036710)

MICROBAC LOCATIONS

Corporate	-	Wexford, PA	**Camp Hill Division**	-	Camp Hill, PA
Pittsburgh Division	-	Warrendale, PA	**Knoxville Division**	-	Maryville, TN
Erie Division	-	Erie, PA / Wilkes-Barre, PA	**Venice Division**	-	Venice, FL / Fort Myers, FL
New Castle Division	-	New Castle, PA	**South Carolina Division**	-	New Ellenton, SC
Kentucky Testing Division	-	Louisville, KY / Evansville, IN	**Fayetteville Division**	-	Fayetteville, NC
Massachusetts Division	-	Marlboro, MA	**Southern Testing Division**	-	Wilson, NC
Gascoyne Division	-	Baltimore, MD	**Hauser Division**	-	Boulder, CO
Corona Division	-	Corona, CA	**Friend Laboratory**	-	Waverly, NY
South Jersey Division	-	Turnersville, NJ			

250 West 84th Drive, Merrillville, IN 46410 TEL.800.536.8379 TEL.219.769.8378 FAX.219.769.1664

Microbac

COOLER INSPECTION

Date: Wednesday, May 24, 2006

Client Name **MICROBAC - KY**

Work Order Number **ME0605473**

Checklist completed b SM | 5/11/2006 10:49:24 PM

Date / Time Received: **5/11/2006 8:41:00 PM**

Received by SM

Reviewed by KZ | 5/12/2006 9:48:06 AM

Carrier name UPS

After-Hour Arrival?	Yes ☐	No ☑	
Shipping container/cooler in good condition?	Yes ☑	No ☐	Not Present ☐
Custody seals intact on shippping container/cooler?	Yes ☐	No ☐	Not Present ☑
Custody seals intact on sample bottles?	Yes ☐	No ☐	Not Present ☑
Chain of custody present?	Yes ☑	No ☐	
Chain of custody included sufficient client identification?	Yes ☑	No ☐	
Chain of custody included sufficient sample collector information?	Yes ☑	No ☐	
Chain of custody included a sample description?	Yes ☑	No ☐	
Chain of custody agrees with sample labels?	Yes ☑	No ☐	
Chain of custody identified the appropriate matrix?	Yes ☑	No ☐	
Chain of custody included date of collection?	Yes ☑	No ☐	
Chain of custody included time of collection?	Yes ☐	No ☑	
Chain of custody identified the appropriate number of containers?	Yes ☑	No ☐	
Samples in proper container/bottle?	Yes ☑	No ☐	
Sample containers intact?	Yes ☑	No ☐	
Sufficient sample volume for indicated test?	Yes ☑	No ☐	
All samples received within holding time?	Yes ☑	No ☐	
Chain of custody identified the appropriate preservatives?	Yes ☐	No ☑	
Samples properly preserved?	Yes ☑	No ☐	

If No, adjusted by? _____ Date/Time _____

Chain of custody included the requested analyses?	Yes ☑	No ☐
Chain of custody signed when relinquished and received?	Yes ☑	No ☐
Samples received on ice?	Yes ☑	No ☐

Container/Temp Blank temperature Temp: On Ice

VOA vials have zero headspace? No VOA vials submitted ☑ Yes ☐ No ☐

ANY "NO" EVALUATION (excluding After-Hour Receipt) REQUIRES CLIENT NOTIFICATION.

General Comments:

Sample ID	Client Sample ID	Comments
ME0605473-01A	485504	485504
ME0605473-02A	485505 Blank	485505
ME0605473-03A	485507	485507
ME0605473-04A	485508 Blank	485508
ME0605473-05A	485490	485490
ME0605473-06A	485491 Blank	485491
ME0605473-07A	485493	485493
ME0605473-08A	485494 Blank	485494

Microbac Laboratories, Inc.

CAMP HILL DIVISION
209 Senate Ave, Suite 105
Camp Hill, PA 17011
(717) 763-0582 Fax (717) 214-1269
Cherie Casari, Lab Director
www.microbac.com E-Mail: camphill@microbac.com

STATE CERT ID.
PA# 21-133
NY# 11650
EPA# PA00028

CHEMISTRY · MICROBIOLOGY · FOOD SAFETY · CONSUMER PRODUCTS
WATER · AIR · WASTES · FOOD · PHARMACEUTICALS · NUTRACEUTICALS

CERTIFICATE OF ANALYSIS

MICROBAC KENTUCKY TESTING lAB
SEAN HYDE
3323 GILMORE INDUSTRIAL BLVD
LOUISVILLE,KY 40213

Date Reported	5/17/2006
Date Received	5/11/2006
Sample ID	0605-00821
Invoice No.	64236
Cust #	009905
Cust P.O. #	
Cust Permit #	

Subject 485492

Sampled By: Date 5/9/2006 Time

Test	Result	Date	Time	Tech	Method
001 **485492**					
TOTAL ORGANIC CARBON	4.6 mg/L	5/15/2006		RWS	SM 19 5310C
TEMP RECD	3 C	5/9/2006		EAP	
Sample Properly Preserved?	YES	5/9/2006		EAP	

Respectfully Submitted:

Microbac Laboratories, Inc.

The data and information on this, and other accompanying documents, represent only the sample(s) analyzed and is rendered upon condition that it is not to be reporduced wholly or in part for advertising or other purposes without approval from the laboratory.
USDA-EPA-NIOSH Testing Food Sanitation Consulting Chemical and Microbiological Analyses and Research

MEMBER ACIL

EnviroData Group
Accredited Lab Data for Today's Environment

Microbac

2520 Regency Rd.
Lexington, KY 40503
Phone: 859-276-3506
Toll Free: 800-489-3506
Fax: 859-278-5665
E-mail: info@envirodatagroup.com

Analytical Results

Kentucky Utilities Company
Attn: Mr. Roger Medina
"LG&E Energy, Env. Affiars"
220 West Main
Louisville, KY 40232

Chain of Custody: 46144
Project Name:
Project Number:
Report Reference:46144-20060526143853

cc:

Date/Time Received: 05/09/2006 14:00
Temperature Upon Receipt: 3 C

Collector: M-JRH
Client Manager: Lisa Martin

Laboratory Sample #: 485503 **Client Sample ID:** 003-Cooling Tower Blowdown **Sampled:** 05/09/2006 10:25
Sample Replicate # 1

Biochemical Oxygen Demand-Carbonaceous **Method:** EPA 405.1 **Prep. Method:** N/A
Analyzed by JRV on May 10, 2006 at 08:00.

Parameter	Result	Units	Reporting Limit	Client Limit	Qualifiers
Oxygen Demand, Biochemical, 5-Day/	< 2.00	mg/L	2.00	N/A	

Organic Nitrogen **Method:** EPA351.2/350.1 **Prep. Method:** CALC
Analyzed by CALC on May 18, 2006 at 16:23.

Parameter	Result	Units	Reporting Limit	Client Limit	Qualifiers
Nitrogen, Organic	0.227	mg/L	0.100	N/A	

Total Hardness **Method:** SM 2340B **Prep. Method:** CALC
Analyzed by CALC on May 24, 2006 at 17:38.

Parameter	Result	Units	Reporting Limit	Client Limit	Qualifiers
Hardness, Total	140	mg/L CaCO3	1.25	N/A	

pH (Field) **Method:** EPA150.1/SW9045 **Prep. Method:** N/A
Analyzed by FIELD on May 09, 2006 at 10:25.

Parameter	Result	Units	Reporting Limit	Client Limit	Qualifiers
pH (Field)	7.53	S.U.	N/A	N/A	

Temperature (Field) **Method:** EPA170.1 **Prep. Method:** N/A
Analyzed by FIELD on May 09, 2006 at 10:25.

Parameter	Result	Units	Reporting Limit	Client Limit	Qualifiers
Temperature (Field)	20.4	Celsius	N/A	N/A	

Flow (Field) **Method:** **Prep. Method:** N/A
Analyzed by FIELD on May 09, 2006 at 10:25.

Parameter	Result	Units	Reporting Limit	Client Limit	Qualifiers
Flow (Client)	0.007	MGD	N/A	N/A	

Inorganic Anions **Method:** EPA 300 **Prep. Method:** N/A
Analyzed by KTL on May 16, 2006 at 9:31.

Parameter	Result	Units	Reporting Limit	Client Limit	Qualifiers
Fluoride	< 0.500	MG/L	0.05	N/A	
Chloride	8.40	MG/L	0.05	N/A	
Sulfate	64.0	MG/L	0.02	N/A	

Results reported on a Wet Weight Basis

Issued: 5/26/2006

EnviroData Group

Microbac

Accredited Lab Data for Today's Environment

Chain of Custody: 46144
Project Name:
Project Number:

Laboratory Sample #: 485503 **Client Sample ID:** 003-Cooling Tower Blowdown **Sampled:** 05/09/2006 10:25
Sample Replicate # 1

Volatile Organics **Method:** EPA624 **Prep. Method:** N/A
Analyzed by KRS on May 10, 2006 at 10:24.

Parameter	Result	Units	Reporting Limit	Client Limit	Qualifiers
1,2-Dichloroethane-d4	162	% Recovery		N/A	S
d8-Toluene	107	% Recovery		N/A	
4-Bromofluorobenzene	89	% Recovery		N/A	
Chloromethane	< 0.0050	mg/L	0.0050	N/A	
Bromomethane	< 0.0050	mg/L	0.0050	N/A	
Vinyl Chloride	< 0.0050	mg/L	0.0050	N/A	
Chloroethane	< 0.0050	mg/L	0.0050	N/A	
Acrolein	< 0.010	mg/L	0.010	N/A	
Methylene Chloride	< 0.0050	mg/L	0.0050	N/A	
Trichlorofluoromethane	< 0.0050	mg/L	0.0050	N/A	
1,1-Dichloroethene	< 0.0050	mg/L	0.0050	N/A	
Methyl tert-butyl ether	< 0.0050	mg/L	0.0050	N/A	
1,1-Dichloroethane	< 0.0050	mg/L	0.0050	N/A	
Acrylonitrile	< 0.0050	mg/L	0.0050	N/A	
trans-1,2-Dichloroethene	< 0.0050	mg/L	0.0050	N/A	
Chloroform	< 0.0050	mg/L	0.0050	N/A	
1,2-Dichloroethane	< 0.0050	mg/L	0.0050	N/A	
1,1,1-Trichloroethane	< 0.0050	mg/L	0.0050	N/A	
Carbon Tetrachloride	< 0.0050	mg/L	0.0050	N/A	
Bromodichloromethane	< 0.0050	mg/L	0.0050	N/A	
1,2-Dichloropropane	< 0.0050	mg/L	0.0050	N/A	
2-Chloroethylvinyl ether	< 0.010	mg/L	0.010	N/A	
cis-1,3-Dichloropropene	< 0.0050	mg/L	0.0050	N/A	
Trichloroethene	< 0.0050	mg/L	0.0050	N/A	
Benzene	< 0.0050	mg/L	0.0050	N/A	
Dibromochloromethane	< 0.0050	mg/L	0.0050	N/A	
trans-1,3-Dichloropropene	< 0.0050	mg/L	0.0050	N/A	
1,1,2-Trichloroethane	< 0.0050	mg/L	0.0050	N/A	
Bromoform	< 0.0050	mg/L	0.0050	N/A	
Tetrachloroethene	< 0.0050	mg/L	0.0050	N/A	
1,1,2,2-Tetrachloroethane	< 0.0050	mg/L	0.0050	N/A	
Toluene	< 0.0050	mg/L	0.0050	N/A	
Chlorobenzene	< 0.0050	mg/L	0.0050	N/A	
Ethylbenzene	< 0.0050	mg/L	0.0050	N/A	
m/p Xylenes	< 0.010	mg/L	0.010	N/A	
1,3-Dichlorobenzene	< 0.0050	mg/L	0.0050	N/A	
1,4-Dichlorobenzene	< 0.0050	mg/L	0.0050	N/A	
1,2-Dichlorobenzene	< 0.0050	mg/L	0.0050	N/A	
Naphthalene	< 0.0050	mg/L	0.0050	N/A	
Xylenes	< 0.015	mg/L	0.015	N/A	

Semivolatile Organics **Method:** EPA625 **Prep. Method:** EPA 625
Analyzed by KTL on May 16, 2006 at 23:00.

Parameter	Result	Units	Reporting Limit	Client Limit	Qualifiers

EnviroData Group

Microbac

Accredited Lab Data for Today's Environment

Chain of Custody: 46144
Project Name:
Project Number:

Laboratory Sample #: 485503 **Client Sample ID:** 003-Cooling Tower Blowdown **Sampled:** 05/09/2006 10:25
Sample Replicate # 1

Semivolatile Organics **Method:** EPA625 **Prep. Method:** EPA 625

Analyzed by KTL on May 16, 2006 at 23:00.

Parameter	Result	Units	Reporting Limit	Client Limit	Qualifiers
2,4,5-Trichlorophenol		mg/L	0.01	N/A	
2-Fluorophenol	68	% Recovery		N/A	
Phenol-d5		% Recovery		N/A	
Nitrobenzene-d5	59	% Recovery		N/A	
2-Fluorobiphenyl	68	% Recovery		N/A	
2,4,6-Tribromophenol	76	% Recovery		N/A	
N-Nitrosodimethylamine	< 0.010	MG/L	0.01	N/A	
Bis(2-Chloroethyl)Ether	< 0.010	MG/L	0.01	N/A	
Phenol	< 0.010	MG/L	0.01	N/A	
2-Chlorophenol	< 0.010	MG/L	0.01	N/A	
1,3-Dichlorobenzene	< 0.010	MG/L	0.01	N/A	
1,4-Dichlorobenzene	< 0.010	MG/L	0.01	N/A	
1,2-Dichlorobenzene	< 0.010	MG/L	0.01	N/A	
Bis(2-Chloroisopropyl)Ether	< 0.010	MG/L	0.01	N/A	
Hexachloroethane	< 0.010	MG/L	0.01	N/A	
N-Nitroso-Di-n-Propylamine	< 0.010	MG/L	0.01	N/A	
Nitrobenzene	< 0.010	MG/L	0.01	N/A	
Isophorone	< 0.010	MG/L	0.01	N/A	
2-Nitrophenol	< 0.010	MG/L	0.01	N/A	
2,4-Dimethylphenol	< 0.010	MG/L	0.01	N/A	
Bis(2-chloroethoxy)methane	< 0.010	MG/L	0.01	N/A	
2,4-Dichlorophenol	< 0.010	MG/L	0.01	N/A	
1,2,4-Trichlorobenzene	< 0.010	MG/L	0.01	N/A	
Naphthalene	< 0.010	MG/L	0.01	N/A	
Hexachlorobutadiene	< 0.010	MG/L	0.01	N/A	
4-Chloro-3-Methylphenol	< 0.010	MG/L	0.01	N/A	
Hexachlorocyclopentadiene	< 0.010	MG/L	0.01	N/A	
2,4,6-Trichlorophenol	< 0.010	MG/L	0.01	N/A	
2-Chloronaphthalene	< 0.010	MG/L	0.01	N/A	
Acenaphthylene	< 0.010	MG/L	0.01	N/A	
Dimethylphthalate	< 0.010	MG/L	0.01	N/A	
2,6-Dinitrotoluene	< 0.010	MG/L	0.01	N/A	
Acenaphthene	< 0.010	MG/L	0.01	N/A	
2,4-Dinitrophenol	< 0.010	MG/L	0.01	N/A	
2,4-Dinitrotoluene	< 0.010	MG/L	0.01	N/A	
4-Nitrophenol	< 0.010	MG/L	0.01	N/A	
Fluorene	< 0.010	MG/L	0.01	N/A	
4-Chlorophenyl-Phenylether	< 0.010	MG/L	0.01	N/A	
Diethylphthalate	< 0.010	MG/L	0.01	N/A	
2-Methyl-4,6-Dinitrophenol	< 0.010	MG/L	0.01	N/A	
N-Nitrosodiphenylamine	< 0.010	MG/L	0.01	N/A	
4-Bromophenyl-Phenylether	< 0.010	MG/L	0.01	N/A	
Hexachlorobenzene	< 0.010	MG/L	0.01	N/A	
Pentachlorophenol	< 0.010	MG/L	0.01	N/A	

EnviroData Group

Microbac

Accredited Lab Data for Today's Environment

Chain of Custody: 46144
Project Name:
Project Number:

Laboratory Sample #: 485503 **Client Sample ID:** 003-Cooling Tower Blowdown **Sampled:** 05/09/2006 10:25
Sample Replicate # 1

Semivolatile Organics **Method:** EPA625 **Prep. Method:** EPA 625
Analyzed by KTL on May 16, 2006 at 23:00.

Parameter	Result	Units	Reporting Limit	Client Limit	Qualifiers
Phenanthrene	< 0.010	MG/L	0.01	N/A	
Anthracene	< 0.010	MG/L	0.01	N/A	
Di-n-Butylphthalate	< 0.010	MG/L	0.01	N/A	
Fluoranthene	< 0.010	MG/L	0.01	N/A	
Benzidene	< 0.010	MG/L	0.01	N/A	
Butylbenzylphthalate	< 0.010	MG/L	0.01	N/A	
3,3-Dichlorobenzidine	< 0.010	MG/L	0.01	N/A	
Benzo(a)Anthracene	< 0.010	MG/L	0.01	N/A	
Chrysene	< 0.010	MG/L	0.01	N/A	
Bis(2-Ethylhexyl)Phthalate	< 0.010	MG/L	0.01	N/A	
Di-n-Octylphthalate	< 0.010	MG/L	0.01	N/A	
Benzo(b)Fluoranthene	< 0.010	MG/L	0.01	N/A	
Benzo(k)Fluoranthene	< 0.010	MG/L	0.01	N/A	
Benzo(a)Pyrene	< 0.010	MG/L	0.01	N/A	
Indeno(1,2,3-cd)Pyrene	< 0.010	MG/L	0.01	N/A	
Dibenzo(a,h)Anthracene	< 0.010	MG/L	0.01	N/A	
Benzo(g,h,i)Perylene	< 0.010	MG/L	0.01	N/A	
Pyrene	< 0.010	MG/L	0.01	N/A	

Total Metals **Method:** EPA200.7 **Prep. Method:** EPA 200.7
Analyzed by KTL on May 12, 2006 at 0:00.

Parameter	Result	Units	Reporting Limit	Client Limit	Qualifiers
Total Aluminum	< 1.00	MG/L	1	N/A	
Total Antimony	0.020	MG/L	0.01	N/A	
Total Arsenic	< 0.100	MG/L	0.1	N/A	
Total Barium	0.030	MG/L	0.01	N/A	
Total Beryllium	< 0.010	MG/L	0.01	N/A	
Total Boron	< 0.500	MG/L	0.5	N/A	
Total Cadmium	< 0.010	MG/L	0.01	N/A	
Total Calcium	42.5	MG/L	0.5	N/A	
Total Chromium	< 0.010	MG/L	0.01	N/A	
Total Cobalt	< 0.010	MG/L	0.01	N/A	
Total Copper	< 0.010	MG/L	0.01	N/A	
Total Iron	< 0.050	MG/L	0.05	N/A	
Total Lead	< 0.010	MG/L	0.01	N/A	
Total Magnesium	8.10	MG/L	0.1	N/A	
Total Manganese	< 0.010	MG/L	0.01	N/A	
Total Molybdenum	0.140	MG/L	0.02	N/A	
Total Nickel	< 0.010	MG/L	0.01	N/A	
Total Selenium	< 0.100	MG/L	0.1	N/A	
Total Silver	< 0.010	MG/L	0.01	N/A	
Total Thallium	< 0.050	MG/L	0.05	N/A	
Total Titanium	< 0.010	MG/L	0.01	N/A	
Total Zinc	< 0.010	MG/L	0.01	N/A	

Results reported on a Wet Weight Basis

Issued: 5/26/2006

EnviroData Group

Microbac

Accredited Lab Data for Today's Environment

Chain of Custody: 46144
Project Name:
Project Number:

Laboratory Sample #: 485503 **Client Sample ID:** 003-Cooling Tower Blowdown **Sampled:** 05/09/2006 10:25
Sample Replicate # 1

Total Metals **Method:** EPA200.7 **Prep. Method:** EPA 200.7
Analyzed by KTL on May 12, 2006 at 0:00.

Parameter	Result	Units	Reporting Limit	Client Limit	Qualifiers
Total Tin	< 0.050	MG/L	0.05	N/A	

Carbon, Total Organic Sub **Method:** N/A **Prep. Method:** N/A
Sub-Contracted Result. Please See Attached.

Bromide Sub **Method:** N/A **Prep. Method:** N/A
Sub-Contracted Result. Please See Attached.

Color (ADMI) **Method:** EPA 110.1 **Prep. Method:** N/A
Analyzed by KTL on May 11, 2006 at 12:13.

Parameter	Result	Units	Reporting Limit	Client Limit	Qualifiers
Color (ADMI)	13.0	ADMI	0.1	N/A	

Color (ADMI) (pH 7.6 Adjusted) **Method:** EPA 110.1 **Prep. Method:** N/A
Analyzed by KTL on May 11, 2006 at 12:13.

Parameter	Result	Units	Reporting Limit	Client Limit	Qualifiers
Color (ADMI) (pH 7.6 Adjusted)	13.0	ADMI	0.1	N/A	

Total Cyanide **Method:** EPA 335.4 **Prep. Method:** EPA 335.1
Analyzed by JPM on May 18, 2006 at 14:55. Prepped by JPM on May 18, 2006 at 11:30.

Parameter	Result	Units	Reporting Limit	Client Limit	Qualifiers
Cyanide, Total	< 0.010	mg/L	0.010	N/A	

Chemical Oxygen Demand **Method:** EPA 410.4 **Prep. Method:** N/A
Analyzed by JRV on May 11, 2006 at 06:45.

Parameter	Result	Units	Reporting Limit	Client Limit	Qualifiers
Oxygen Demand, Chemical	1.78	mg/L	1.00	N/A	

Surfactants (MBAS) **Method:** EPA425.1 **Prep. Method:** N/A
Analyzed by KTL on May 11, 2006 at 10:19.

Parameter	Result	Units	Reporting Limit	Client Limit	Qualifiers
Surfactants, Anionic	< 0.200	MG/L	0.2	N/A	

Ammonia Nitrogen **Method:** EPA 350.1 **Prep. Method:** N/A
Analyzed by JPM on May 18, 2006 at 16:23.

Parameter	Result	Units	Reporting Limit	Client Limit	Qualifiers
Nitrogen, Ammonia	< 0.100	mg/L	0.100	N/A	

Total Oil and Grease **Method:** EPA 1664 **Prep. Method:** N/A
Analyzed by KTL on May 12, 2006 at 12:36.

Parameter	Result	Units	Reporting Limit	Client Limit	Qualifiers
Oil & Grease, Total	< 5.00	MG/L	5	N/A	

Total Phosphorus **Method:** EPA 365.1 **Prep. Method:** EPA365.1
Analyzed by JPM on May 15, 2006 at 11:58. Prepped by JPM on May 14, 2006 at 17:00.

Parameter	Result	Units	Reporting Limit	Client Limit	Qualifiers

EnviroData Group

Microbac

Accredited Lab Data for Today's Environment

Chain of Custody: 46144
Project Name:
Project Number:

Laboratory Sample #: 485503 **Client Sample ID:** 003-Cooling Tower Blowdown **Sampled:** 05/09/2006 10:25
Sample Replicate # 1

Total Phosphorus **Method:** EPA 365.1 **Prep. Method:** EPA365.1
Analyzed by JPM on May 15, 2006 at 11:58. Prepped by JPM on May 14, 2006 at 17:00.

Parameter	Result	Units	Reporting Limit	Client Limit	Qualifiers
Phosphorus, Total	0.052	mg/L as P	0.010	N/A	

Total Phenols **Method:** EPA 420.4 **Prep. Method:** EPA 420.4
Analyzed by KTL on May 16, 2006 at 9:57.

Parameter	Result	Units	Reporting Limit	Client Limit	Qualifiers
Phenols	0.050	MG/L	0.05	N/A	

Sulfide **Method:** EPA376.2 **Prep. Method:** N/A
Analyzed by KTL on May 11, 2006 at 17:29.

Parameter	Result	Units	Reporting Limit	Client Limit	Qualifiers
Sulfide	< 0.200	MG/L	0.2	N/A	

Sulfite **Method:** EPA377.1 **Prep. Method:** N/A
Analyzed by JPM on May 10, 2006 at 18:30.

Parameter	Result	Units	Reporting Limit	Client Limit	Qualifiers
Sulfite	< 2.00	mg/L	2.00	N/A	H

Total Kjeldahl Nitrogen **Method:** EPA 351.2 **Prep. Method:** EPA 351.2
Analyzed by JPM on May 16, 2006 at 17:09. Prepped by JPM on May 14, 2006 at 10:00.

Parameter	Result	Units	Reporting Limit	Client Limit	Qualifiers
Nitrogen, Total Kjeldahl	0.227	mg/L	0.100	N/A	

Total Suspended Solids **Method:** EPA 160.2/160.4 **Prep. Method:** N/A
Analyzed by KTL on May 16, 2006 at 14:00.

Parameter	Result	Units	Reporting Limit	Client Limit	Qualifiers
Solids, Total Suspended	< 5.00	MG/L	5	N/A	

Nitrogen, Nitrate + Nitrite **Method:** EPA 353.2 **Prep. Method:** N/A
Analyzed by JPM on May 10, 2006 at 23:47.

Parameter	Result	Units	Reporting Limit	Client Limit	Qualifiers
Nitrogen, Nitrate + Nitrite	0.901	mg/L	0.030	N/A	

Laboratory Sample #: 485504 **Client Sample ID:** 003-Cooling Tower Blowdown **Sampled:** 05/09/2006 10:25
Sample Replicate # 1

Mercury Sub **Method:** 1631E **Prep. Method:** N/A
Sub-Contracted Result. Please See Attached.

Laboratory Sample #: 485505 **Client Sample ID:** Field Blank **Sampled:** 05/09/2006 10:25
Sample Replicate # 1

Mercury Sub **Method:** 1631E **Prep. Method:** N/A
Sub-Contracted Result. Please See Attached.

EnviroData Group

Accredited Lab Data for Today's Environment

Microbac

Chain of Custody: 46144
Project Name:
Project Number:

All samples were received intact and properly preserved unless otherwise noted.
The results reported relate only to the samples tested.
This report shall not be reproduced except in full, without written approval of this laboratory.

ACCREDITED
Lab#: 100343

Submitted by: Lisa Martin

Client Manager: Lisa Martin
Please contact Lisa Martin with any questions.

Specific tests covered by the A2LA accreditation meet the requirements of the A2LA accreditation standard. Please refer to http://www.envirodatagroup.com/EDG_A2LA_Accredited_Analytes.pdf on our website for a list of our current A2LA accreditations.

EnviroData Group

Accredited Lab Data for Today's Environment

Microbac

Data Qualifiers

Qualifier	Description
A	E. coli present.
A'	E. coli absent.
B	Analyte detected in associated MB.
C	Sample result confirmed.
D	Results reported from dilution.
E	Analyte concentration exceeds calibration range.
F	Unable to analyze due to sample matrix interference.
H	Sample was received or analyzed past the established holding time.
J	Estimated concentration.
K	Sample contained lighter hydrocarbon fractions.
L	Sample contained heavier hydrocarbon fractions.
M	MS and/or MSD recovery outside acceptance limits.
N	Presumptive evidence of analyte present.
O	Sample hydrocarbon pattern does not match calibration standard pattern.
P	Percent difference between primary and secondary column concentrations exceeds acceptance limit.
Q	LCS outside acceptance limits.
R	Data unusable.
S	Surrogate outside acceptance limits on initial and reanalysis.
S'	Surrogates diluted below detection.
T	Sample received improperly preserved.
U	Analyte not detected.
W	Raised quantitation or reporting limit due to limited sample volume.
Y	Replicate/Duplicate precision outside acceptance limits.
Z'	Calibration criteria exceeded but for this situation acceptable by method.
Z	Calibration criteria exceeded.
M'	Result from Method of Standard Additions (MSA).
Q'	LCS/LCD analyzed due to insufficient sample for MS/MSD.

The uncertainty of analytical results can be calculated using the following equation:

$$n = t^*s/1.414$$

where

t=12.706 (Students t value for 95% confidence interval of two replicates)

s= standard deviation of sample and duplicate data

1.414 is square root of the number of replicates (two)

Abbreviations

Laboratory Control Sample	(LCS)
Laboratory Control Duplicate	(LCD)
Matrix Spike	(MS)
Matrix Spike Duplicate	(MSD)
Method Blank	(MB)

Microbac

May 24, 2006

M. Gearheart
Microbac Laboratories
Kentucky Testing Division
3323 Gilmore Ind. Blvd.
Louisville, KY 40213

Work Order No.: ME0605473

RE: LL Hg (1631) analysis

Dear M. Gearheart:

Microbac Laboratories, Inc. received 8 samples on 5/11/2006 8:41:00 PM for the analyses presented in the following report.

The enclosed results were obtained from and are applicable to the sample(s) as received at the laboratory. All sample results are reported on an "as received" basis unless otherwise noted. This report includes the numbered pages as well as the Cooler Inspection Report and Chain of Custody form(s).

All data included in this report have been reviewed and meet the applicable project specific and certification specific requirements, unless otherwise noted. A qualifications page is included in this report and lists the programs under which Microbac maintains certification.

This report shall not be reproduced except in full, without the written approval of Microbac Laboratories.

We appreciate the opportunity to service your analytical needs. If you have any questions, please feel free to contact us.

Sincerely,
Microbac Laboratories, Inc.

Karen A. Ziolkowski
Senior Project Manager

Enclosures

250 West 84th Drive, Merrillville, IN 46410 TEL.800.536.8379 TEL.219.769.8378 FAX.219.769.1664

Microbac

ANALYTICAL RESULTS

Date: *Wednesday, May 24, 2006*

Client:	Microbac Laboratories		
Client Project:	LL Hg (1631) analysis		
Client Sample ID:	485504	***Work Order / ID:***	ME0605473-01A
Sample Description:		***Collection Date:***	05/09/06 00:00
Sample Matrix:	Aqueous	***Date Received:***	05/11/06 20:41

Analyses	ST	Result	RL	Qual	Units	DF	Analyzed
TOTAL METALS Method: **1631E**				Prep Date/Time: **05/15/06 08:00**		Analyst: **TMG**	
Mercury	A	***ND***	0.500		ng/L	1	05/23/06 20:13
Method Blank, average	A	***ND***	0.400		ng/L	1	05/23/06 20:13

Microbac

ANALYTICAL RESULTS

Date: *Wednesday, May 24, 2006*

Client:	Microbac Laboratories		
Client Project:	LL Hg (1631) analysis		
Client Sample ID:	485505 Blank	***Work Order / ID:***	ME0605473-02A
Sample Description:		***Collection Date:***	05/09/06 00:00
Sample Matrix:	Aqueous	***Date Received:***	05/11/06 20:41

Analyses	ST	Result	RL	Qual	Units	DF	Analyzed
TOTAL METALS Method: **1631E**				Prep Date/Time: **05/15/06 08:00**		Analyst: **TMG**	
Mercury	A	***0.706***	0.500		ng/L	1	05/23/06 20:30
Method Blank, average	A	***ND***	0.400		ng/L	1	05/23/06 20:30

Microbac

FLAGS, FOOTNOTES AND ABBREVIATIONS (as needed)

NA	=	Not Analyzed	N/A	=	Not Applicable			
mg/L	=	Milligrams per Liter (ppm)	ug/L	=	Micrograms per Liter (ppb)	cfu	=	Colony Forming Unit
mg/Kg	=	Milligrams per Kilogram (ppm)	ug/Kg	=	Micrograms per Kilogram (ppb)	ng/L	=	Nanograms per Liter (ppt)

U	=	Undetected
J	=	Analyte concentration detected between RL and MDL (Metals / Organics)
B	=	Detected in the associated Method Blank at a concentration above the routine PQL/RL
b	=	Detected in the associated Method Blank at a concentration above the Method Detection Limit but less than the routine PQL/RL
D	=	Surrogate recoveries are not calculated due to sample dilution
ND	=	Not Detected at the Reporting Limit (or the Method Detection Limit, if listed)
E	=	Value above quantitation range
H	=	Analyte was prepared and/or analyzed outside of the analytical method holding time
I	=	Matrix Interference
R	=	RPD outside accepted recovery limits
S	=	Spike recovery outside recovery limits
Surr	=	Surrogate

DF = Dilution Factor RL = Reporting Limit ST = Sample Type MDL = Method Detection Limit

SAMPLE TYPES

A	=	Analyte
I	=	Internal Standard
S	=	Surrogate
T	=	Tentatively Identified Compound (TIC, concentration estimated)

QC SAMPLE IDENTIFICATIONS

MBLK	=	Method Blank	ICSA	=	Interference Check Standard "A"	OPR	=	Ongoing Precision and Recovery Standard
DUP	=	Method Duplicate	ICSAB	=	Interference Check Standard "AB"			
LCS	=	Laboratory Control Sample	LCSD	=	Laboratory Control Sample Duplicate			
MS	=	Matrix Spike	MSD	=	Matrix Spike Duplicate			
ICB	=	Initial Calibration Blank	CCB	=	Continuing Calibration Blank			
ICV	=	Initial Calibration Verification	CCV	=	Continuing Calibration Verification			
PDS	=	Post Digestion Spike	SD	=	Serial Dilution			

CERTIFICATIONS

Below is a list of certifications maintained by the Microbac Merrillville Laboratory. All data included in this report has been reviewed for and meets all project specific and quality control requirements of the applicable accreditation, unless otherwise noted. Complete lists of individual analytes pursuant to each certification below are available upon request.

- Illinois EPA for the analysis wastewater and solid waste in accordance with the requirements of the National Environmental Laboratory Accreditation Program [NELAP] (accreditation #100435)
- Illinois Department of Public Health for the microbiological analysis of drinking water (registry #175458)
- Indiana DEM approved support laboratory for solid waste and wastewater analyses
- Indiana SDH for the chemical analysis of drinking water (lab #C-45-02)
- Indiana SDH for the microbiological analysis of drinking water (lab #M-45-08)
- Kentucky EPPC for the analysis of samples applicable to the Underground Storage Tank program (lab #0061)
- North Carolina DENR for the environmental analysis for NPDES effluent, surface water, groundwater, and pretreatment regulations (certificate #597)
- Wisconsin DNR for the chemical analysis of wastewater and solid waste (lab #998036710)

MICROBAC LOCATIONS

Corporate	-	Wexford, PA	**Camp Hill Division**	-	Camp Hill, PA
Pittsburgh Division	-	Warrendale, PA	**Knoxville Division**	-	Maryville, TN
Erie Division	-	Erie, PA / Wilkes-Barre, PA	**Venice Division**	-	Venice, FL / Fort Myers, FL
New Castle Division	-	New Castle, PA	**South Carolina Division**	-	New Ellenton, SC
Kentucky Testing Division	-	Louisville, KY / Evansville, IN	**Fayetteville Division**	-	Fayetteville, NC
Massachusetts Division	-	Marlboro, MA	**Southern Testing Division**	-	Wilson, NC
Gascoyne Division	-	Baltimore, MD	**Hauser Division**	-	Boulder, CO
Corona Division	-	Corona, CA	**Friend Laboratory**	-	Waverly, NY
South Jersey Division	-	Turnersville, NJ			

250 West 84th Drive, Merrillville, IN 46410 TEL.800.536.8379 TEL.219.769.8378 FAX.219.769.1664

Microbac

COOLER INSPECTION

Date: Wednesday, May 24, 2006

Client Name **MICROBAC - KY**

Work Order Number **ME0605473**

Checklist completed b SM | 5/11/2006 10:49:24 PM

Date / Time Received: **5/11/2006 8:41:00 PM**

Received by SM

Reviewed by KZ | 5/12/2006 9:48:06 AM

Carrier name UPS

After-Hour Arrival?	Yes ☐	No ☑	
Shipping container/cooler in good condition?	Yes ☑	No ☐	Not Present ☐
Custody seals intact on shippping container/cooler?	Yes ☐	No ☐	Not Present ☑
Custody seals intact on sample bottles?	Yes ☐	No ☐	Not Present ☑
Chain of custody present?	Yes ☑	No ☐	
Chain of custody included sufficient client identification?	Yes ☑	No ☐	
Chain of custody included sufficient sample collector information?	Yes ☑	No ☐	
Chain of custody included a sample description?	Yes ☑	No ☐	
Chain of custody agrees with sample labels?	Yes ☑	No ☐	
Chain of custody identified the appropriate matrix?	Yes ☑	No ☐	
Chain of custody included date of collection?	Yes ☑	No ☐	
Chain of custody included time of collection?	Yes ☐	No ☑	
Chain of custody identified the appropriate number of containers?	Yes ☑	No ☐	
Samples in proper container/bottle?	Yes ☑	No ☐	
Sample containers intact?	Yes ☑	No ☐	
Sufficient sample volume for indicated test?	Yes ☑	No ☐	
All samples received within holding time?	Yes ☑	No ☐	
Chain of custody identified the appropriate preservatives?	Yes ☐	No ☑	
Samples properly preserved?	Yes ☑	No ☐	

If No, adjusted by? _____ Date/Time _____

Chain of custody included the requested analyses?	Yes ☑	No ☐
Chain of custody signed when relinquished and received?	Yes ☑	No ☐
Samples received on ice?	Yes ☑	No ☐

Container/Temp Blank temperature Temp: On Ice

VOA vials have zero headspace? No VOA vials submitted ☑ Yes ☐ No ☐

ANY "NO" EVALUATION (excluding After-Hour Receipt) REQUIRES CLIENT NOTIFICATION.

General Comments:

Sample ID	Client Sample ID	Comments
ME0605473-01A	485504	485504
ME0605473-02A	485505 Blank	485505
ME0605473-03A	485507	485507
ME0605473-04A	485508 Blank	485508
ME0605473-05A	485490	485490
ME0605473-06A	485491 Blank	485491
ME0605473-07A	485493	485493
ME0605473-08A	485494 Blank	485494

Microbac Laboratories, Inc.
CAMP HILL DIVISION
209 Senate Ave, Suite 105
Camp Hill, PA 17011
(717) 763-0582 Fax (717) 214-1269
Cherie Casari, Lab Director
www.microbac.com E-Mail: camphill@microbac.com

STATE CERT ID.
PA# 21-133
NY# 11650
EPA# PA00028

CHEMISTRY · MICROBIOLOGY · FOOD SAFETY · CONSUMER PRODUCTS
WATER · AIR · WASTES · FOOD · PHARMACEUTICALS · NUTRACEUTICALS

CERTIFICATE OF ANALYSIS

MICROBAC KENTUCKY TESTING IAB
SEAN HYDE
3323 GILMORE INDUSTRIAL BLVD
LOUISVILLE,KY 40213

Date Reported	5/17/2006
Date Received	5/11/2006
Sample ID	0605-00820
Invoice No.	64235
Cust #	009905
Cust P.O. #	
Cust Permit #	

Subject 485503

Sampled By: Date 5/9/2006 Time

Test	Result	Date	Time	Tech	Method
001 485503					
TOTAL ORGANIC CARBON	2.9 mg/L	5/15/2006		RWS	SM 19 5310C
TEMP RECD	3 C	5/9/2006		EAP	
Sample Properly Preserved?	YES	5/9/2006		EAP	

Respectfully Submitted:
Microbac Laboratories, Inc.

The data and information on this, and other accompanying documents, represent only the sample(s) analyzed and is rendered upon condition that it is not to be reproduced wholly or in part for advertising or other purposes without approval from the laboratory.
USDA-EPA-NIOSH Testing Food Sanitation Consulting Chemical and Microbiological Analyses and Research

MEMBER ACIL

EnviroData Group
Accredited Lab Data for Today's Environment

Microbac

2520 Regency Rd.
Lexington, KY 40503
Phone: 859-276-3506
Toll Free: 800-489-3506
Fax: 859-278-5665
E-mail: info@envirodatagroup.com

Analytical Results

Kentucky Utilities Company
Attn: Mr. Roger Medina
"LG&E Energy, Env. Affiars"
220 West Main
Louisville, KY 40232

Chain of Custody: 46145
Project Name:
Project Number:
Report Reference:46145-20060526143834

cc:

Date/Time Received: 05/09/2006 14:00
Temperature Upon Receipt: 3 C

Collector: M-JRH
Client Manager: Lisa Martin

Laboratory Sample #: 485506 **Client Sample ID:** Plant Intake **Sampled:** 05/09/2006 09:35
Sample Replicate # 1

Biochemical Oxygen Demand-Carbonaceous **Method:** EPA 405.1 **Prep. Method:** N/A
Analyzed by JRV on May 10, 2006 at 08:00.

Parameter	Result	Units	Reporting Limit	Client Limit	Qualifiers
Oxygen Demand, Biochemical, 5-Day/	< 2.00	mg/L	2.00	N/A	

Organic Nitrogen **Method:** EPA351.2/350.1 **Prep. Method:** CALC
Analyzed by CALC on May 18, 2006 at 16:25.

Parameter	Result	Units	Reporting Limit	Client Limit	Qualifiers
Nitrogen, Organic	0.268	mg/L	0.100	N/A	

Total Hardness **Method:** SM 2340B **Prep. Method:** CALC
Analyzed by CALC on May 24, 2006 at 17:40.

Parameter	Result	Units	Reporting Limit	Client Limit	Qualifiers
Hardness, Total	143	mg/L CaCO3	1.25	N/A	

pH (Field) **Method:** EPA150.1/SW9045 **Prep. Method:** N/A
Analyzed by FIELD on May 09, 2006 at 09:35.

Parameter	Result	Units	Reporting Limit	Client Limit	Qualifiers
pH (Field)	7.34	S.U.	N/A	N/A	

Temperature (Field) **Method:** EPA170.1 **Prep. Method:** N/A
Analyzed by FIELD on May 09, 2006 at 09:35.

Parameter	Result	Units	Reporting Limit	Client Limit	Qualifiers
Temperature (Field)	15.3	Celsius	N/A	N/A	

Flow (Field) **Method:** **Prep. Method:** N/A
Analyzed by FIELD on May 09, 2006 at 09:35.

Parameter	Result	Units	Reporting Limit	Client Limit	Qualifiers
Flow (Client)	0.018	MGD	N/A	N/A	

Inorganic Anions **Method:** EPA 300 **Prep. Method:** N/A
Analyzed by KTL on May 16, 2006 at 9:31.

Parameter	Result	Units	Reporting Limit	Client Limit	Qualifiers
Fluoride	< 0.500	MG/L	0.05	N/A	
Chloride	7.90	MG/L	0.05	N/A	
Sulfate	65.0	MG/L	0.02	N/A	

Results reported on a Wet Weight Basis

Issued: 5/26/2006

EnviroData Group

Microbac

Accredited Lab Data for Today's Environment

Chain of Custody: 46145
Project Name:
Project Number:

Laboratory Sample #: 485506 **Client Sample ID:** Plant Intake **Sampled:** 05/09/2006 09:35
Sample Replicate # 1

Volatile Organics **Method:** EPA624 **Prep. Method:** N/A

Analyzed by KRS on May 10, 2006 at 10:58.

Parameter	Result	Units	Reporting Limit	Client Limit	Qualifiers
1,2-Dichloroethane-d4	174	% Recovery		N/A	S
d8-Toluene	104	% Recovery		N/A	
4-Bromofluorobenzene	88	% Recovery		N/A	
Chloromethane	< 0.0050	mg/L	0.0050	N/A	
Bromomethane	< 0.0050	mg/L	0.0050	N/A	
Vinyl Chloride	< 0.0050	mg/L	0.0050	N/A	
Chloroethane	< 0.0050	mg/L	0.0050	N/A	
Acrolein	< 0.010	mg/L	0.010	N/A	
Methylene Chloride	< 0.0050	mg/L	0.0050	N/A	
Trichlorofluoromethane	< 0.0050	mg/L	0.0050	N/A	
1,1-Dichloroethene	< 0.0050	mg/L	0.0050	N/A	
Methyl tert-butyl ether	< 0.0050	mg/L	0.0050	N/A	
1,1-Dichloroethane	< 0.0050	mg/L	0.0050	N/A	
Acrylonitrile	< 0.0050	mg/L	0.0050	N/A	
trans-1,2-Dichloroethene	< 0.0050	mg/L	0.0050	N/A	
Chloroform	< 0.0050	mg/L	0.0050	N/A	
1,2-Dichloroethane	< 0.0050	mg/L	0.0050	N/A	
1,1,1-Trichloroethane	< 0.0050	mg/L	0.0050	N/A	
Carbon Tetrachloride	< 0.0050	mg/L	0.0050	N/A	
Bromodichloromethane	< 0.0050	mg/L	0.0050	N/A	
1,2-Dichloropropane	< 0.0050	mg/L	0.0050	N/A	
2-Chloroethylvinyl ether	< 0.010	mg/L	0.010	N/A	
cis-1,3-Dichloropropene	< 0.0050	mg/L	0.0050	N/A	
Trichloroethene	< 0.0050	mg/L	0.0050	N/A	
Benzene	< 0.0050	mg/L	0.0050	N/A	
Dibromochloromethane	< 0.0050	mg/L	0.0050	N/A	
trans-1,3-Dichloropropene	< 0.0050	mg/L	0.0050	N/A	
1,1,2-Trichloroethane	< 0.0050	mg/L	0.0050	N/A	
Bromoform	< 0.0050	mg/L	0.0050	N/A	
Tetrachloroethene	< 0.0050	mg/L	0.0050	N/A	
1,1,2,2-Tetrachloroethane	< 0.0050	mg/L	0.0050	N/A	
Toluene	< 0.0050	mg/L	0.0050	N/A	
Chlorobenzene	< 0.0050	mg/L	0.0050	N/A	
Ethylbenzene	< 0.0050	mg/L	0.0050	N/A	
m/p Xylenes	< 0.010	mg/L	0.010	N/A	
1,3-Dichlorobenzene	< 0.0050	mg/L	0.0050	N/A	
1,4-Dichlorobenzene	< 0.0050	mg/L	0.0050	N/A	
1,2-Dichlorobenzene	< 0.0050	mg/L	0.0050	N/A	
Naphthalene	< 0.0050	mg/L	0.0050	N/A	
Xylenes	< 0.015	mg/L	0.015	N/A	

Semivolatile Organics **Method:** EPA625 **Prep. Method:** EPA 625

Analyzed by KTL on May 17, 2006 at 0:00.

Parameter	Result	Units	Reporting Limit	Client Limit	Qualifiers

EnviroData Group

Microbac

Accredited Lab Data for Today's Environment

Chain of Custody: 46145
Project Name:
Project Number:

Laboratory Sample #: 485506 **Client Sample ID:** Plant Intake **Sampled:** 05/09/2006 09:35
Sample Replicate # 1

Semivolatile Organics **Method:** EPA625 **Prep. Method:** EPA 625

Analyzed by KTL on May 17, 2006 at 0:00.

Parameter	Result	Units	Reporting Limit	Client Limit	Qualifiers
2,4,5-Trichlorophenol		mg/L	0.01	N/A	
2-Fluorophenol	74	% Recovery		N/A	
Phenol-d5		% Recovery		N/A	
Nitrobenzene-d5	71	% Recovery		N/A	
2-Fluorobiphenyl	74	% Recovery		N/A	
2,4,6-Tribromophenol	82	% Recovery		N/A	
N-Nitrosodimethylamine	< 0.010	MG/L	0.01	N/A	
Bis(2-Chloroethyl)Ether	< 0.010	MG/L	0.01	N/A	
Phenol	< 0.010	MG/L	0.01	N/A	
2-Chlorophenol	< 0.010	MG/L	0.01	N/A	
1,3-Dichlorobenzene	< 0.010	MG/L	0.01	N/A	
1,4-Dichlorobenzene	< 0.010	MG/L	0.01	N/A	
1,2-Dichlorobenzene	< 0.010	MG/L	0.01	N/A	
Bis(2-Chloroisopropyl)Ether	< 0.010	MG/L	0.01	N/A	
Hexachloroethane	< 0.010	MG/L	0.01	N/A	
N-Nitroso-Di-n-Propylamine	< 0.010	MG/L	0.01	N/A	
Nitrobenzene	< 0.010	MG/L	0.01	N/A	
Isophorone	< 0.010	MG/L	0.01	N/A	
2-Nitrophenol	< 0.010	MG/L	0.01	N/A	
2,4-Dimethylphenol	< 0.010	MG/L	0.01	N/A	
Bis(2-chloroethoxy)methane	< 0.010	MG/L	0.01	N/A	
2,4-Dichlorophenol	< 0.010	MG/L	0.01	N/A	
1,2,4-Trichlorobenzene	< 0.010	MG/L	0.01	N/A	
Naphthalene	< 0.010	MG/L	0.01	N/A	
Hexachlorobutadiene	< 0.010	MG/L	0.01	N/A	
4-Chloro-3-Methylphenol	< 0.010	MG/L	0.01	N/A	
Hexachlorocyclopentadiene	< 0.010	MG/L	0.01	N/A	
2,4,6-Trichlorophenol	< 0.010	MG/L	0.01	N/A	
2-Chloronaphthalene	< 0.010	MG/L	0.01	N/A	
Acenaphthylene	< 0.010	MG/L	0.01	N/A	
Dimethylphthalate	< 0.010	MG/L	0.01	N/A	
2,6-Dinitrotoluene	< 0.010	MG/L	0.01	N/A	
Acenaphthene	< 0.010	MG/L	0.01	N/A	
2,4-Dinitrophenol	< 0.010	MG/L	0.01	N/A	
2,4-Dinitrotoluene	< 0.010	MG/L	0.01	N/A	
4-Nitrophenol	< 0.010	MG/L	0.01	N/A	
Fluorene	< 0.010	MG/L	0.01	N/A	
4-Chlorophenyl-Phenylether	< 0.010	MG/L	0.01	N/A	
Diethylphthalate	< 0.010	MG/L	0.01	N/A	
2-Methyl-4,6-Dinitrophenol	< 0.010	MG/L	0.01	N/A	
N-Nitrosodiphenylamine	< 0.010	MG/L	0.01	N/A	
4-Bromophenyl-Phenylether	< 0.010	MG/L	0.01	N/A	
Hexachlorobenzene	< 0.010	MG/L	0.01	N/A	
Pentachlorophenol	< 0.010	MG/L	0.01	N/A	

Results reported on a Wet Weight Basis

Issued: 5/26/2006

EnviroData Group

Microbac

Accredited Lab Data for Today's Environment

Chain of Custody: 46145
Project Name:
Project Number:

Laboratory Sample #: 485506 **Client Sample ID:** Plant Intake **Sampled:** 05/09/2006 09:35
Sample Replicate # 1

Semivolatile Organics **Method:** EPA625 **Prep. Method:** EPA 625

Analyzed by KTL on May 17, 2006 at 0:00.

Parameter	Result	Units	Reporting Limit	Client Limit	Qualifiers
Phenanthrene	< 0.010	MG/L	0.01	N/A	
Anthracene	< 0.010	MG/L	0.01	N/A	
Di-n-Butylphthalate	< 0.010	MG/L	0.01	N/A	
Fluoranthene	< 0.010	MG/L	0.01	N/A	
Benzidene	< 0.010	MG/L	0.01	N/A	
Butylbenzylphthalate	< 0.010	MG/L	0.01	N/A	
3,3-Dichlorobenzidine	< 0.010	MG/L	0.01	N/A	
Benzo(a)Anthracene	< 0.010	MG/L	0.01	N/A	
Chrysene	< 0.010	MG/L	0.01	N/A	
Bis(2-Ethylhexyl)Phthalate	< 0.010	MG/L	0.01	N/A	
Di-n-Octylphthalate	< 0.010	MG/L	0.01	N/A	
Benzo(b)Fluoranthene	< 0.010	MG/L	0.01	N/A	
Benzo(k)Fluoranthene	< 0.010	MG/L	0.01	N/A	
Benzo(a)Pyrene	< 0.010	MG/L	0.01	N/A	
Indeno(1,2,3-cd)Pyrene	< 0.010	MG/L	0.01	N/A	
Dibenzo(a,h)Anthracene	< 0.010	MG/L	0.01	N/A	
Benzo(g,h,i)Perylene	< 0.010	MG/L	0.01	N/A	
Pyrene	< 0.010	MG/L	0.01	N/A	

Total Metals **Method:** EPA200.7 **Prep. Method:** EPA 200.7

Analyzed by KTL on May 12, 2006 at 0:00.

Parameter	Result	Units	Reporting Limit	Client Limit	Qualifiers
Total Aluminum	< 1.00	MG/L	1	N/A	
Total Antimony	< 0.050	MG/L	0.01	N/A	
Total Arsenic	< 0.100	MG/L	0.1	N/A	
Total Barium	0.030	MG/L	0.01	N/A	
Total Beryllium	< 0.010	MG/L	0.01	N/A	
Total Boron	< 0.500	MG/L	0.5	N/A	
Total Cadmium	< 0.010	MG/L	0.01	N/A	
Total Calcium	43.0	MG/L	0.5	N/A	
Total Chromium	< 0.010	MG/L	0.01	N/A	
Total Cobalt	< 0.010	MG/L	0.01	N/A	
Total Copper	< 0.010	MG/L	0.01	N/A	
Total Iron	< 0.050	MG/L	0.05	N/A	
Total Lead	< 0.010	MG/L	0.01	N/A	
Total Magnesium	8.50	MG/L	0.1	N/A	
Total Manganese	< 0.010	MG/L	0.01	N/A	
Total Molybdenum	< 0.020	MG/L	0.02	N/A	
Total Nickel	< 0.010	MG/L	0.01	N/A	
Total Selenium	< 0.100	MG/L	0.1	N/A	
Total Silver	< 0.010	MG/L	0.01	N/A	
Total Thallium	< 0.050	MG/L	0.05	N/A	
Total Titanium	< 0.010	MG/L	0.01	N/A	
Total Zinc	< 0.010	MG/L	0.01	N/A	

Results reported on a Wet Weight Basis

Issued: 5/26/2006

EnviroData Group

Microbac

Accredited Lab Data for Today's Environment

Chain of Custody: 46145
Project Name:
Project Number:

Laboratory Sample #: 485506 **Client Sample ID:** Plant Intake **Sampled:** 05/09/2006 09:35
Sample Replicate # 1

Total Metals **Method:** EPA200.7 **Prep. Method:** EPA 200.7
Analyzed by KTL on May 12, 2006 at 0:00.

Parameter	Result	Units	Reporting Limit	Client Limit	Qualifiers
Total Tin	< 0.050	MG/L	0.05	N/A	

Carbon, Total Organic Sub **Method:** N/A **Prep. Method:** N/A
Sub-Contracted Result. Please See Attached.

Bromide Sub **Method:** N/A **Prep. Method:** N/A
Sub-Contracted Result. Please See Attached.

Color (ADMI) **Method:** EPA 110.1 **Prep. Method:** N/A
Analyzed by KTL on May 11, 2006 at 12:13.

Parameter	Result	Units	Reporting Limit	Client Limit	Qualifiers
Color (ADMI)	19.0	ADMI	0.1	N/A	

Color (ADMI) (pH 7.6 Adjusted) **Method:** EPA 110.1 **Prep. Method:** N/A
Analyzed by KTL on May 11, 2006 at 12:13.

Parameter	Result	Units	Reporting Limit	Client Limit	Qualifiers
Color (ADMI) (pH 7.6 Adjusted)	12.0	ADMI	0.1	N/A	

Total Cyanide **Method:** EPA 335.4 **Prep. Method:** EPA 335.1
Analyzed by JPM on May 18, 2006 at 15:18. Prepped by JPM on May 18, 2006 at 11:30.

Parameter	Result	Units	Reporting Limit	Client Limit	Qualifiers
Cyanide, Total	< 0.010	mg/L	0.010	N/A	

Chemical Oxygen Demand **Method:** EPA 410.4 **Prep. Method:** N/A
Analyzed by JRV on May 11, 2006 at 06:45.

Parameter	Result	Units	Reporting Limit	Client Limit	Qualifiers
Oxygen Demand, Chemical	1.83	mg/L	1.00	N/A	

Surfactants (MBAS) **Method:** EPA425.1 **Prep. Method:** N/A
Analyzed by KTL on May 11, 2006 at 10:19.

Parameter	Result	Units	Reporting Limit	Client Limit	Qualifiers
Surfactants, Anionic	< 0.200	MG/L	0.2	N/A	

Ammonia Nitrogen **Method:** EPA 350.1 **Prep. Method:** N/A
Analyzed by JPM on May 18, 2006 at 16:25.

Parameter	Result	Units	Reporting Limit	Client Limit	Qualifiers
Nitrogen, Ammonia	< 0.100	mg/L	0.100	N/A	

Total Oil and Grease **Method:** EPA 1664 **Prep. Method:** N/A
Analyzed by KTL on May 12, 2006 at 12:36.

Parameter	Result	Units	Reporting Limit	Client Limit	Qualifiers
Oil & Grease, Total	< 5.00	MG/L	5	N/A	

Total Phosphorus **Method:** EPA 365.1 **Prep. Method:** EPA365.1
Analyzed by JPM on May 15, 2006 at 12:01. Prepped by JPM on May 14, 2006 at 17:00.

Parameter	Result	Units	Reporting Limit	Client Limit	Qualifiers

EnviroData Group

Microbac

Accredited Lab Data for Today's Environment

Chain of Custody: 46145
Project Name:
Project Number:

Laboratory Sample #: 485506 **Client Sample ID:** Plant Intake **Sampled:** 05/09/2006 09:35
Sample Replicate # 1

Total Phosphorus **Method:** EPA 365.1 **Prep. Method:** EPA365.1
Analyzed by JPM on May 15, 2006 at 12:01. Prepped by JPM on May 14, 2006 at 17:00.

Parameter	Result	Units	Reporting Limit	Client Limit	Qualifiers
Phosphorus, Total	0.029	mg/L as P	0.010	N/A	

Total Phenols **Method:** EPA 420.4 **Prep. Method:** EPA 420.4
Analyzed by KTL on May 16, 2006 at 9:57.

Parameter	Result	Units	Reporting Limit	Client Limit	Qualifiers
Phenols	0.050	MG/L	0.05	N/A	

Sulfide **Method:** EPA376.2 **Prep. Method:** N/A
Analyzed by KTL on May 11, 2006 at 17:29.

Parameter	Result	Units	Reporting Limit	Client Limit	Qualifiers
Sulfide	0.300	MG/L	0.2	N/A	

Sulfite **Method:** EPA377.1 **Prep. Method:** N/A
Analyzed by JPM on May 10, 2006 at 18:30.

Parameter	Result	Units	Reporting Limit	Client Limit	Qualifiers
Sulfite	< 2.00	mg/L	2.00	N/A	H

Total Kjeldahl Nitrogen **Method:** EPA 351.2 **Prep. Method:** EPA 351.2
Analyzed by JPM on May 16, 2006 at 17:10. Prepped by JPM on May 14, 2006 at 10:00.

Parameter	Result	Units	Reporting Limit	Client Limit	Qualifiers
Nitrogen, Total Kjeldahl	0.268	mg/L	0.100	N/A	

Total Suspended Solids **Method:** EPA 160.2/160.4 **Prep. Method:** N/A
Analyzed by KTL on May 16, 2006 at 14:00.

Parameter	Result	Units	Reporting Limit	Client Limit	Qualifiers
Solids, Total Suspended	< 5.00	MG/L	5	N/A	

Nitrogen, Nitrate + Nitrite **Method:** EPA 353.2 **Prep. Method:** N/A
Analyzed by JPM on May 10, 2006 at 23:49.

Parameter	Result	Units	Reporting Limit	Client Limit	Qualifiers
Nitrogen, Nitrate + Nitrite	0.898	mg/L	0.030	N/A	

Laboratory Sample #: 485507 **Client Sample ID:** Plant Intake **Sampled:** 05/09/2006 09:35
Sample Replicate # 1

Mercury Sub **Method:** 1631E **Prep. Method:** N/A
Sub-Contracted Result. Please See Attached.

Laboratory Sample #: 485508 **Client Sample ID:** Field Blank **Sampled:** 05/09/2006 09:35
Sample Replicate # 1

Mercury Sub **Method:** 1631E **Prep. Method:** N/A
Sub-Contracted Result. Please See Attached.

EnviroData Group

Accredited Lab Data for Today's Environment

Microbac

Chain of Custody: 46145
Project Name:
Project Number:

All samples were received intact and properly preserved unless otherwise noted.
The results reported relate only to the samples tested.
This report shall not be reproduced except in full, without written approval of this laboratory.

ACCREDITED
Lab#: 100343

Submitted by: Lisa Martin

Client Manager: Lisa Martin
Please contact Lisa Martin with any questions.

Specific tests covered by the A2LA accreditation meet the requirements of the A2LA accreditation standard. Please refer to http://www.envirodatagroup.com/EDG_A2LA_Accredited_Analytes.pdf on our website for a list of our current A2LA accreditations.

EnviroData Group

Microbac

Accredited Lab Data for Today's Environment

Data Qualifiers

Qualifier	Description
A	E. coli present.
A'	E. coli absent.
B	Analyte detected in associated MB.
C	Sample result confirmed.
D	Results reported from dilution.
E	Analyte concentration exceeds calibration range.
F	Unable to analyze due to sample matrix interference.
H	Sample was received or analyzed past the established holding time.
I	Estimated concentration.
K	Sample contained lighter hydrocarbon fractions.
L	Sample contained heavier hydrocarbon fractions.
M	MS and/or MSD recovery outside acceptance limits.
N	Presumptive evidence of analyte present.
O	Sample hydrocarbon pattern does not match calibration standard pattern.
P	Percent difference between primary and secondary column concentrations exceeds acceptance limit.
Q	LCS outside acceptance limits.
R	Data unusable.
S	Surrogate outside acceptance limits on initial and reanalysis.
S'	Surrogates diluted below detection.
T	Sample received improperly preserved.
U	Analyte not detected.
W	Raised quantitation or reporting limit due to limited sample volume.
Y	Replicate/Duplicate precision outside acceptance limits.
Z'	Calibration criteria exceeded but for this situation acceptable by method.
Z	Calibration criteria exceeded.
M'	Result from Method of Standard Additions (MSA).
Q'	LCS/LCD analyzed due to insufficient sample for MS/MSD.

The uncertainty of analytical results can be calculated using the following equation:

$$n = t*s/1.414$$

where

t=12.706 (Students t value for 95% confidence interval of two replicates)
s= standard deviation of sample and duplicate data
1.414 is square root of the number of replicates (two)

Abbreviations

Laboratory Control Sample	(LCS)
Laboratory Control Duplicate	(LCD)
Matrix Spike	(MS)
Matrix Spike Duplicate	(MSD)
Method Blank	(MB)

Microbac

May 24, 2006

M. Gearheart
Microbac Laboratories
Kentucky Testing Division
3323 Gilmore Ind. Blvd.
Louisville, KY 40213

Work Order No.: ME0605473

RE: LL Hg (1631) analysis

Dear M. Gearheart:

Microbac Laboratories, Inc. received 8 samples on 5/11/2006 8:41:00 PM for the analyses presented in the following report.

The enclosed results were obtained from and are applicable to the sample(s) as received at the laboratory. All sample results are reported on an "as received" basis unless otherwise noted. This report includes the numbered pages as well as the Cooler Inspection Report and Chain of Custody form(s).

All data included in this report have been reviewed and meet the applicable project specific and certification specific requirements, unless otherwise noted. A qualifications page is included in this report and lists the programs under which Microbac maintains certification.

This report shall not be reproduced except in full, without the written approval of Microbac Laboratories.

We appreciate the opportunity to service your analytical needs. If you have any questions, please feel free to contact us.

Sincerely,
Microbac Laboratories, Inc.

Karen A. Ziolkowski
Senior Project Manager

Enclosures

250 West 84th Drive, Merrillville, IN 46410 TEL.800.536.8379 TEL.219.769.8378 FAX.219.769.1664

Microbac

ANALYTICAL RESULTS

Date: *Wednesday, May 24, 2006*

Client:	Microbac Laboratories		
Client Project:	LL Hg (1631) analysis		
Client Sample ID:	485507	***Work Order / ID:***	ME0605473-03A
Sample Description:		***Collection Date:***	05/09/06 00:00
Sample Matrix:	Aqueous	***Date Received:***	05/11/06 20:41

Analyses	ST	Result	RL	Qual	Units	DF	Analyzed
TOTAL METALS Method: **1631E**				Prep Date/Time: **05/15/06 08:00**		Analyst: **TMG**	
Mercury	A	***1.13***	0.500		ng/L	1	05/23/06 20:35
Method Blank, average	A	***ND***	0.400		ng/L	1	05/23/06 20:35

Microbac

ANALYTICAL RESULTS

Date: *Wednesday, May 24, 2006*

Client:	Microbac Laboratories		
Client Project:	LL Hg (1631) analysis		
Client Sample ID:	485508 Blank	***Work Order / ID:***	ME0605473-04A
Sample Description:		***Collection Date:***	05/09/06 00:00
Sample Matrix:	Aqueous	***Date Received:***	05/11/06 20:41

Analyses	ST	Result	RL	Qual	Units	DF	Analyzed
TOTAL METALS Method: **1631E**				Prep Date/Time: **05/15/06 08:00**		Analyst: **TMG**	
Mercury	A	***ND***	0.500		ng/L	1	05/23/06 20:41
Method Blank, average	A	***ND***	0.400		ng/L	1	05/23/06 20:41

Microbac

FLAGS, FOOTNOTES AND ABBREVIATIONS (as needed)

NA	=	Not Analyzed	N/A	=	Not Applicable			
mg/L	=	Milligrams per Liter (ppm)	ug/L	=	Micrograms per Liter (ppb)	cfu	=	Colony Forming Unit
mg/Kg	=	Milligrams per Kilogram (ppm)	ug/Kg	=	Micrograms per Kilogram (ppb)	ng/L	=	Nanograms per Liter (ppt)

U	=	Undetected
J	=	Analyte concentration detected between RL and MDL (Metals / Organics)
B	=	Detected in the associated Method Blank at a concentration above the routine PQL/RL
b	=	Detected in the associated Method Blank at a concentration above the Method Detection Limit but less than the routine PQL/RL
D	=	Surrogate recoveries are not calculated due to sample dilution
ND	=	Not Detected at the Reporting Limit (or the Method Detection Limit, if listed)
E	=	Value above quantitation range
H	=	Analyte was prepared and/or analyzed outside of the analytical method holding time
I	=	Matrix Interference
R	=	RPD outside accepted recovery limits
S	=	Spike recovery outside recovery limits
Surr	=	Surrogate

DF = Dilution Factor RL = Reporting Limit ST = Sample Type MDL = Method Detection Limit

SAMPLE TYPES

A	=	Analyte
I	=	Internal Standard
S	=	Surrogate
T	=	Tentatively Identified Compound (TIC, concentration estimated)

QC SAMPLE IDENTIFICATIONS

MBLK	=	Method Blank	ICSA	=	Interference Check Standard "A"	OPR	=	Ongoing Precision and Recovery Standard
DUP	=	Method Duplicate	ICSAB	=	Interference Check Standard "AB"			
LCS	=	Laboratory Control Sample	LCSD	=	Laboratory Control Sample Duplicate			
MS	=	Matrix Spike	MSD	=	Matrix Spike Duplicate			
ICB	=	Initial Calibration Blank	CCB	=	Continuing Calibration Blank			
ICV	=	Initial Calibration Verification	CCV	=	Continuing Calibration Verification			
PDS	=	Post Digestion Spike	SD	=	Serial Dilution			

CERTIFICATIONS

Below is a list of certifications maintained by the Microbac Merrillville Laboratory. All data included in this report has been reviewed for and meets all project specific and quality control requirements of the applicable accreditation, unless otherwise noted. Complete lists of individual analytes pursuant to each certification below are available upon request.

- Illinois EPA for the analysis wastewater and solid waste in accordance with the requirements of the National Environmental Laboratory Accreditation Program [NELAP] (accreditation #100435)
- Illinois Department of Public Health for the microbiological analysis of drinking water (registry #175458)
- Indiana DEM approved support laboratory for solid waste and wastewater analyses
- Indiana SDH for the chemical analysis of drinking water (lab #C-45-02)
- Indiana SDH for the microbiological analysis of drinking water (lab #M-45-08)
- Kentucky EPPC for the analysis of samples applicable to the Underground Storage Tank program (lab #0061)
- North Carolina DENR for the environmental analysis for NPDES effluent, surface water, groundwater, and pretreatment regulations (certificate #597)
- Wisconsin DNR for the chemical analysis of wastewater and solid waste (lab #998036710)

MICROBAC LOCATIONS

Corporate	-	Wexford, PA
Pittsburgh Division	-	Warrendale, PA
Erie Division	-	Erie, PA / Wilkes-Barre, PA
New Castle Division	-	New Castle, PA
Kentucky Testing Division	-	Louisville, KY / Evansville, IN
Massachusetts Division	-	Marlboro, MA
Gascoyne Division	-	Baltimore, MD
Corona Division	-	Corona, CA
South Jersey Division	-	Turnersville, NJ
Camp Hill Division	-	Camp Hill, PA
Knoxville Division	-	Maryville, TN
Venice Division	-	Venice, FL / Fort Myers, FL
South Carolina Division	-	New Ellenton, SC
Fayetteville Division	-	Fayetteville, NC
Southern Testing Division	-	Wilson, NC
Hauser Division	-	Boulder, CO
Friend Laboratory	-	Waverly, NY

250 West 84th Drive, Merrillville, IN 46410 TEL.800.536.8379 TEL.219.769.8378 FAX.219.769.1664

Microbac

COOLER INSPECTION

Date: Wednesday, May 24, 2006

Client Name **MICROBAC - KY**

Work Order Number **ME0605473**

Checklist completed b SM | 5/11/2006 10:49:24 PM

Date / Time Received: **5/11/2006 8:41:00 PM**

Received by SM

Reviewed by KZ | 5/12/2006 9:48:06 AM

Carrier name UPS

After-Hour Arrival?	Yes ☐	No ☑	
Shipping container/cooler in good condition?	Yes ☑	No ☐	Not Present ☐
Custody seals intact on shippping container/cooler?	Yes ☐	No ☐	Not Present ☑
Custody seals intact on sample bottles?	Yes ☐	No ☐	Not Present ☑
Chain of custody present?	Yes ☑	No ☐	
Chain of custody included sufficient client identification?	Yes ☑	No ☐	
Chain of custody included sufficient sample collector information?	Yes ☑	No ☐	
Chain of custody included a sample description?	Yes ☑	No ☐	
Chain of custody agrees with sample labels?	Yes ☑	No ☐	
Chain of custody identified the appropriate matrix?	Yes ☑	No ☐	
Chain of custody included date of collection?	Yes ☑	No ☐	
Chain of custody included time of collection?	Yes ☐	No ☑	
Chain of custody identified the appropriate number of containers?	Yes ☑	No ☐	
Samples in proper container/bottle?	Yes ☑	No ☐	
Sample containers intact?	Yes ☑	No ☐	
Sufficient sample volume for indicated test?	Yes ☑	No ☐	
All samples received within holding time?	Yes ☑	No ☐	
Chain of custody identified the appropriate preservatives?	Yes ☐	No ☑	
Samples properly preserved?	Yes ☑	No ☐	

If No, adjusted by? _____ Date/Time _____

Chain of custody included the requested analyses?	Yes ☑	No ☐
Chain of custody signed when relinquished and received?	Yes ☑	No ☐
Samples received on ice?	Yes ☑	No ☐

Container/Temp Blank temperature Temp: On Ice

VOA vials have zero headspace? No VOA vials submitted ☑ Yes ☐ No ☐

ANY "NO" EVALUATION (excluding After-Hour Receipt) REQUIRES CLIENT NOTIFICATION.

General Comments:

Sample ID	Client Sample ID	Comments
ME0605473-01A	485504	485504
ME0605473-02A	485505 Blank	485505
ME0605473-03A	485507	485507
ME0605473-04A	485508 Blank	485508
ME0605473-05A	485490	485490
ME0605473-06A	485491 Blank	485491
ME0605473-07A	485493	485493
ME0605473-08A	485494 Blank	485494

250 West 84th Drive, Merrillville, IN 46410 TEL.800.536.8379 TEL.219.769.8378 FAX.219.769.1664

Microbac Laboratories, Inc.

CAMP HILL DIVISION
209 Senate Ave, Suite 105
Camp Hill, PA 17011
(717) 763-0582 Fax (717) 214-1269
Cherie Casari, Lab Director
www.microbac.com E-Mail: camphill@microbac.com

STATE CERT ID.
PA# 21-133
NY# 11650
EPA# PA00028

CHEMISTRY · MICROBIOLOGY · FOOD SAFETY · CONSUMER PRODUCTS
WATER · AIR · WASTES · FOOD · PHARMACEUTICALS · NUTRACEUTICALS

CERTIFICATE OF ANALYSIS

MICROBAC KENTUCKY TESTING IAB
SEAN HYDE
3323 GILMORE INDUSTRIAL BLVD
LOUISVILLE,KY 40213

Date Reported	5/17/2006
Date Received	5/11/2006
Sample ID	0605-00819
Invoice No.	64234
Cust #	009905
Cust P.O. #	
Cust Permit #	

Subject 485506

Sampled By: Date 5/9/2006 Time

Test	Result	Date	Time	Tech	Method
001 485506					
TOTAL ORGANIC CARBON	3.0 mg/L	5/15/2006		RWS	SM 19 5310C
TEMP RECD	3 C	5/9/2006		EAP	
Sample Properly Preserved?	YES	5/9/2006		EAP	

Respectfully Submitted: Microbac Laboratories, Inc.

The data and information on this, and other accompanying documents, represent only the sample(s) analyzed and is rendered upon condition that it is not to be reporduced wholly or in part for advertising or other purposes without approval from the laboratory.
USDA-EPA-NIOSH Testing Food Sanitation Consulting Chemical and Microbiological Analyses and Research

MEMBER ACIL

ERNIE FLETCHER
GOVERNOR

ENVIRONMENTAL AND PUBLIC PROTECTION CABINET
DEPARTMENT FOR ENVIRONMENTAL PROTECTION
DIVISION OF WATER
14 REILLY ROAD
FRANKFORT, KENTUCKY 40601-1190
www.kentucky.gov

LAJUANA S. WILCHER
SECRETARY

July 17, 2006

AUG 2 2006

SECOND NOTICE

Mr. John Moffett
Kentucky Utilities
One Quality Street
Lexington, Kentucky 40507

RE: KPDES No. KY0002020
E.W. Brown Generating Station
Mercer County, Kentucky

Dear Mr. Moffett:

Our records indicate that your Kentucky Pollutant Discharge Elimination System (KPDES) permit is due to expire on January 31, 2007. According to the KPDES Regulation 401 KAR 5:060, "any person with a currently effective permit shall submit a new application at least 180 days before the expiration of the existing permit…" **The due date for your permit renewal application is August 15, 2006.**

Please complete the enclosed application forms and return to the KPDES Branch, Division of Water, at the above address by the indicated due date. Applications received after the due date are in violation of 401 KAR 5:060, Section 1, which could result in enforcement action being taken.

If you have any questions regarding the completion of these forms, please contact me at (502) 564-2225, extension 470.

Sincerely,

Vickie L. Prather

Vickie Prather, Acting Supervisor
Inventory and Data Management Section
KPDES Branch
Division of Water

VLP:ASW:asw
Enclosures
C: Frankfort Regional Office
Division of Water Files

an e·on company

220 West Main Street
PO Box 32010
Louisville, KY 40232

August 14, 2006

RECEIVED
AUG 14 2006
KPDES BRANCH

Kentucky Division of Water, KPDES Branch
Inventory & Data Management Section
Frankfort Office Park
14 Reilly Road
Frankfort, KY 40601

RE: NPDES No. KY0002020 E. W. Brown Generating Station, Mercer County, KY

Enclosed please find a completed KPDES permit application for the reissuance of the expiring permit held by Kentucky Utilities Company for its E. W. Brown fossil-fuel fired steam electric generating station. We have included KPDES Forms 1 and C for the facility and a check, made payable to the Kentucky State Treasurer, in the amount of $640.00 for the application filing fee for the generating station (categorized as a major industry). In addition, we have attached to the following supporting documentation:

1. Copy of a USGS Topographic Map (noting the facility site and discharge points)
2. Description of Existing Pollution Abatement Facilities
3. Stormwater Runoff Calculations
4. Stormwater Runoff Diagram
5. Water Balance Diagram (30-Day Peak Monthly Process and 1-Day Maximum Conditions)
6. Water Balance Diagram (30-Day Peak Monthly Process and Average Rainfall Conditions)
7. Sample results for the priority pollutant analysis required for Form C from the contracted commercial laboratory.

As directed, we have incorporated changes in plant operations corresponding to the expansion of the ash treatment basin (ATB) facilities and construction of a flue gas desulfurization (FGD) system. The expansion of the ATB facilities included the construction of a new auxiliary ATB basin which will ultimately receive primarily bottom ash sluice flows and the reconstruction-elevation of the existing ATB for it to primarily receive the fly ash sluice flows, gypsum, oil-water separator (cleaned) discharges and plant floor drain flows. The FGD system will commence operations in 2009 and consists of limestone receiving/storage, slurry preparation, absorber, and gypsum dewatering facilities. The flows associated with these facilities have been projected according to current construction plans; as requested, we will notify the KPDES branch to discuss any changes that might be considered and whether they might impact the KPDES permit and/our permitted discharge limits.

If I may be of assistance or you have any questions concerning the attached information, please feel free to contact me at (502) 627-2997.

Sincerely,

Roger J. Medina
Sr. Chemical Engineer, Environmental Affairs

Enclosures

cc: J. N. Voyles - w/o attachments
S. L. Dodson – w/o attachments
J. S. Fraley – w/o attachments
J. W. Moffett
T. E. Lay
W. M. Winkler - w/o attachments
file