Pretreatment Local Limits Evaluation

Regional Wastewater Treatment Plant Ohio County, Kentucky

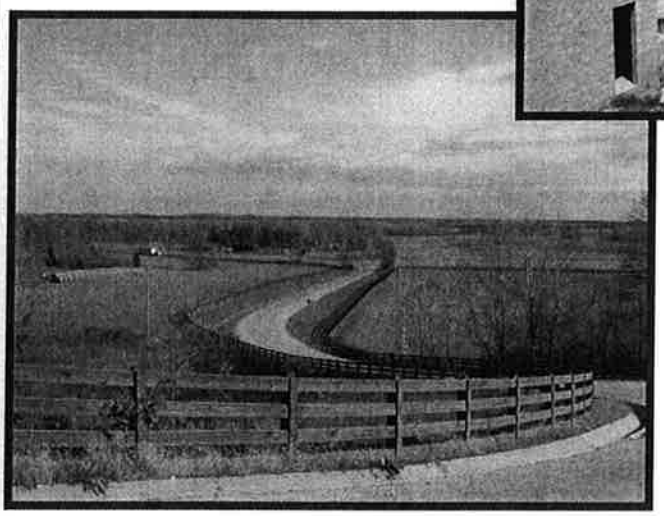

July 2008

HDR|Quest

JUL 9 2008

Pretreatment Local Limits Evaluation
Regional
Wastewater Treatment Plant
Ohio County, Kentucky

July 2008

Prepared by:

HDR|Quest Engineers
2517 Sir Barton Way
Lexington, Kentucky 40509
(859) 223-3755

Table of Contents

Page

- ***Introduction*** 1

- ***Evaluation Procedure*** 1
  - Wastewater Flows 3
  - Domestic Concentrations 4
  - Removal Efficiencies 4
  - Safety Factor 5

- ***Results and Conclusion*** 5

Tables

1 Activated Sludge and Nitrification Threshold Inhibition Levels 2
2 Existing Wastewater Flows 3
3 Domestic and Commercial Background Pollutant Loadings 4
4 Estimated Pollutant Removal Efficiencies 5
5 Final Local Limits Determination 6

Appendices

A - Existing KPDES Permit
B - Steady State Toxics Wasteload Allocation Model (SSTWAM) Output Files
C - Tables for Local Limits Calculations
- Table C1 - Local Limits Determination Based on NPDES Daily Effluent Limits
- Table C2 - Local Limits Determination Based on NPDES Monthly Effluent Limits (Not Used)
- Table C3 - Local Limits Determination Based on Activated Sludge Inhibition Level
- Table C4 - Local Limits Determination Based on Nitrification Inhibition Level
- Table C5 - Local Limits Determination Based on USEPA 503 Sludge Regulations (Not Used)
- Table C6 - Local Limits Determination Based on State Sludge Criteria (Not Used)
- Table C7 - Local Limits Determination Based on Chronic Water Quality Standards
- Table C8 - Local Limits Determination Based on Acute Water Quality Standards
- Table C9 - Local Limits Determination Based on Anaerobic Digester Inhibition Level (Not Used)

Introduction

This report summarizes the evaluation of the industrial pretreatment (IPT) program local limits for the new regional wastewater treatment plant (RWWTP) in Ohio County, Kentucky.

The new RWWTP is located adjacent to the Ohio County Landfill, at the corner of Miller Road and Landfill Road in rural Ohio County. The permitted capacity of the RWWTP is 2.0 million gallons per day (MGD). Treatment processes include mechanical screening, activated sludge extended aeration in an oxidation ditch, clarification, Phosphorus removal, ultraviolet (UV) disinfection, and post aeration. Effluent from the RWWTP is discharged to Rough River. Sludge is thickened, decanted in aerated sludge holding tanks, and dewatered using a belt filter press. Dewatered sludge will be transported to the Ohio County Landfill for disposal.

The new RWWTP is owned and operated by the Ohio County Regional Wastewater District (District). The RWWTP will replace the existing municipal treatment plants in Beaver Dam, Centertown, and Hartford. The RWWTP commenced startup operations in May 2008.

The evaluation of the IPT program local limits is required by the Kentucky Division of Water (KDOW) with a change of treatment process and capacity. A copy of the Kentucky Pollutant Discharge Elimination System (KPDES) Permit No. KY0105791 for the new RWWTP is included in Appendix A.

Evaluation Procedure

The evaluation procedure included a determination of local limits based on the following applicable criteria:

- National Pollutant Discharge Elimination System (NPDES) Daily Effluent Limits
- Activated Sludge Inhibition Level
- Nitrification Inhibition Level
- Chronic Water Quality Standards
- Acute Water Quality Standards

The District's Sewer Use Regulations establish maximum daily concentrations for particular pollutants. Therefore, the NPDES daily effluent limits, not the NPDES monthly effluent limits, were considered in the local limits determination.

Since all sludge from the RWWTP will be hauled to a landfill for disposal, EPA and State of Kentucky sludge regulations and criteria were not a factor in determining the local limits.

NPDES daily effluent limits, acute water quality standards, and chronic water quality standards for particular pollutants were taken from the Steady State Toxics Wasteload Allocation Model (SSTWAM) output file for Rough River provided by KDOW. A copy of this file is provided in Appendix B.

Activated sludge and nitrification inhibition levels were taken from the EPA Local Limits Development Guidance Manual, dated July 2004. Values used were within the minimum range presented. These values are presented in Table 1.

Table 1
Activated Sludge and Nitrification Threshold Inhibition Levels[1]
Regional Wastewater Treatment Plant - Ohio County, Kentucky

Pollutant	*Activated Sludge Threshold Inhibition Level, mg/L*	*Nitrification Threshold Inhibition Level, mg/L*
Arsenic	0.1	1.5
Cadmium	1.0	5.2
Chromium, Hexavalent	1.0	1.0
Chromium (Total)	1.0	0.25
Copper	1.0	0.05
Cyanide	0.1	0.34
Lead	1.0	0.5
Mercury	0.1	--
Nickel	1.0	0.25
Selenium	--	--
Silver	--	--
Zinc	0.3	0.10

Notes: [1]From EPA Local Limits Development Guidance Manual, July 2004, Appendix G - Literature Inhibition Values. Used in Tables C3 and C4 of this report.

Other information used as part of the local limits determination included the following:

- Average daily flow from industrial users.
- Average daily flow to the RWWTP.
- Estimated RWWTP removal efficiencies for particular pollutants.
- Domestic/commercial background loadings to the RWWTP.

Wastewater Flows

From Discharge Monitoring Reports (DMRs) for the treatment plants in Beaver Dam, Centertown, and Hartford, the combined average daily wastewater flow for the 24-month period ending July 2007 was 0.900 MGD (see Table 2).

Table 2
Existing Wastewater Flows
Regional Wastewater Treatment Plant - Ohio County, Kentucky

City	WWTP Effluent Flow (MGD[1])			
	2007 (Jan.-July)[2]	2006 (12 months)	2005 (Aug.-Dec.)[3]	Two-Year Average
Beaver Dam[4]	0.682	0.739	0.433	0.659
Hartford	0.194	0.254	0.160	0.217
Centertown	0.021	0.026	0.026	0.024
TOTAL	--	--	--	**0.900**

Notes: [1]MGD-Million gallons per day. All flows are average daily flows, as reported on the Cities' Discharge Monitoring Reports.
[2]2007 flows from January through July only (seven-month average).
[3]2005 flows from August through December only (five-month average).
[4]Includes flow from Bluegrass Crossings Business Centre.

At the present time, the District's service area includes three permitted industrial users, all within the City of Beaver Dam: Nestaway, Steri-Cycle Inc., and Neo Industries. From the 2007 Annual Pretreatment Report, and data obtained from the City of Beaver Dam for the first six months of 2008, the average daily wastewater flows from the three industries are as follows:

- Nestaway - 16,500 gallons per day (gpd)
- Steri-Cycle, Inc. - 15,000 gpd
- Neo Industries - 2,100 gpd

The total average daily industrial flow from the three industries is approximately 33,600 gpd, or 0.0336 MGD. The domestic and commercial flow is calculated as the total wastewater flow less the industrial flow, or 0.8664 MGD.

Domestic Concentrations

Drinking water data from the Ohio County Water District was used to estimate the domestic and commercial background concentrations for particular pollutants. Concentrations of the regulated pollutants in drinking water are tested annually. Results are posted to the public access drinking water database on the Kentucky Department for Environmental Protection web site (http://dep.gateway.ky.gov). The sample results from 2007 were used to determine the background concentration. These results are presented in Table 3.

Table 3
Domestic and Commercial Background Pollutant Loadings
Regional Wastewater Treatment Plant - Ohio County, Kentucky

Pollutant	*Background Concentration[1] (mg/L)*
Arsenic	<0.001
Cadmium	<0.001
Chromium, Hexavalent	no data available
Chromium (Total)	<0.001
Copper	0.1533
Cyanide	<0.02
Iron	<0.02
Lead	0.005
Mercury	<0.0002
Molybdenum	no data available
Nickel	<0.001
Selenium	<0.001
Silver	<0.002
Zinc	< >0.002

Notes: [1]From Ohio County Water District drinking water data.

Removal Efficiencies

Since the Ohio County RWWTP is a new facility, published data (rather than RWWTP data) was used to estimate removal efficiencies for various pollutants. The estimated removal efficiencies for each pollutant are presented in Table 4.

Table 4
Estimated Pollutant Removal Efficiencies[1]
Regional Wastewater Treatment Plant - Ohio County, Kentucky

Pollutant	*Average Percent Removal*
Arsenic	45
Cadmium	67
Chromium, Hexavalent	82
Chromium (Total)	82
Copper	86
Cyanide	69
Iron	60
Lead	61
Mercury	60
Nickel	42
Selenium	50
Silver	75
Zinc	79

Notes: [1]From EPA Local Limits Development Guidance Manual, July 2004. Used in Tables C1, C3, C4, C7, and C8 of this report.

Safety Factor

Use of a safety factor is recommended due to variability of data, potential for slug loadings from industrial users, and other factors. Application of a safety factor is site specific and depends on local conditions. EPA generally recommends a minimum safety factor of 10 percent. This minimum safety factor was considered adequate for the RWWTP and was applied to all calculations.

Results and Conclusion

The results of the local limits determination are presented in Table 5. The existing local limit for Beaver Dam, calculated allowable local limit, limiting factor(s) for the calculated limit, and proposed local limit are listed for each pollutant. Tables detailing the calculation of the local limits based on the applicable criteria are presented in Appendix C.

Table 5
Final Local Limits Determination
Regional Wastewater Treatment Plant - Ohio County, Kentucky

Pollutant	*Beaver Dam Existing Local Limit, mg/L*[1]	*Calculated Allowable Local Limits, mg/L*	*Limiting Factor(s)*	*Proposed Local Limit, mg/L*
Arsenic	0.26	4.36	Activated Sludge Inhibition Level	0.26
Cadmium	0.007	-0.005	NPDES Daily Effluent Limits	0.001
Chloride	2000	N/A	N/A	2000
Chromium, Hexavalent	--	1.45	NPDES Daily Effluent Limits	1.45
Chromium (Total)	4.00	36.26	Nitrification Inhibition Level	4.00
Copper	0.33	-2.29	NPDES Daily Effluent Limits	0.02
Cyanide (Amenable)	0.069	N/A	N/A	0.069
Cyanide (Total)	0.069	-0.11	NPDES Daily Effluent Limits	0.02
Iron	--	59.75	NPDES Daily Effluent Limits	4.00
Lead	0.012	0.078	NPDES Daily Effluent Limits	0.078
Mercury	0.0005	-0.002	NPDES Daily Effluent Limits	0.0002
Nickel	0.40	2.22	NPDES Daily Effluent Limits	2.22
Selenium	--	0.22	NPDES Daily Effluent Limits	0.22
Silver	0.10	0.34	Acute Water Quality Standards	0.34
Total Toxic Organics (TTO)	--	N/A	N/A	2.13
Zinc	1.44	11.43	Nitrification Inhibition Level	4.00

Notes: [1]From 1992 Water and Sewer Ordinance

The calculated allowable local limit was a negative value for Cadmium, Copper, Cyanide, and Mercury. In the cases of Cadmium, Cyanide, and Mercury, this is because the background concentration of these pollutants in drinking water was overstated due to analytical limitations. The background concentrations input into the calculations for these pollutants are as follows (from Table 2):

- Cadmium 0.001 mg/L
- Cyanide (total) 0.02 mg/L
- Mercury 0.0002 mg/L

The actual background concentrations are less than these amounts, but due to analytical limitations, the extent less is unknown. Therefore, these values were used for the calculations.

Since negative values cannot be established as the local limit, we propose

the local limits for these parameters be set at the practical lower analytical limits. These values are identical to the above listed values.

For Copper, the negative value calculated is the result of a very low allowable concentration listed in the SSTWAM for Rough River. We propose that the local limit be set at the practical lower analytical limit for Copper, which is 0.02 mg/L.

The proposed local limit for Iron is 4.00 mg/L, which matches the existing (Beaver Dam) limit for Chromium and the proposed limit for Chromium. This was judged to be a reasonable aesthetic limit for Iron, even though the RWWTP can treat a much higher concentration.

Likewise, the proposed local limit for Zinc is 4.00 mg/L, which was judged to be a reasonable aesthetic limit for Zinc, even though the RWWTP can handle a higher concentration.

The proposed local limit of 2.13 mg/L for Total Toxic Organics (TTOs) is based on the 40 CFR 433 Metal Finishing standard as recommended by KDOW.

If KDOW concurs with these recommendations, the listed local limits will be included in the District's Sewer Use Regulations.

Appendix A

Existing KPDES Permit

ERNIE FLETCHER
GOVERNOR

ENVIRONMENTAL AND PUBLIC PROTECTION CABINET
DEPARTMENT FOR ENVIRONMENTAL PROTECTION
DIVISION OF WATER
14 REILLY ROAD
FRANKFORT, KENTUCKY 40601-1190
www.kentucky.gov

LAJUANA S. WILCHER
SECRETARY

COPY

FACT SHEET

KENTUCKY POLLUTANT DISCHARGE ELIMINATION SYSTEM PERMIT TO DISCHARGE TREATED WASTEWATER INTO WATERS OF THE COMMONWEALTH

KPDES No.: KY0105791 **Permit Writer:** Robert S. Clay, Jr. **Date:** February 3, 2006
AI No.: 44279

DRAFT
FEB 3, 2006

1. **SYNOPSIS OF APPLICATION**

a. Name and Address of Applicant

Ohio County Regional Wastewater District, Inc.
1500 Bill Monroe Memorial Boulevard
Beaver Dam, Ohio County, KY

b. Facility Location

Ohio County Regional Wastewater Treatment Plant
Landfill Road
Beaver Dam, Ohio County, Kentucky

c. Description of Applicant's Operation

Engaged in collection, treatment, and disposal of wastewater.

d. Production Capacity

2.0 MGD

e. Description of Existing Pollution Abatement Facilities

Treatment process consists of screening, oxidation ditch, chemical phosphorus removal, activated sludge, clarifiers, UV disinfection, and post aeration. Solids are processed by: thickening, belt filter press, and landfill disposal.

jm

f. Permitting Action

This is an issuance of a major KPDES permit for a new municipality.

2. **RECEIVING WATER**

a. Name/Mile Point

Rough River at mile point 26.7

b. Stream Categorization

This stream segment is categorized as high quality

c. Stream Segment Use Classifications

Warmwater Aquatic Habitat, Primary/Secondary Contact Recreation, and Domestic Water Supply

d. Stream Low Flow Condition

43 cfs

3. REPORTED DISCHARGE AND PROPOSED LIMITS - Municipal

Serial Number 001

Effluent Characteristics	Reported Discharge*			Proposed Limits		COMMENTS
	Average Annual Value	Lowest Monthly Value	Highest Monthly Value	Monthly Average	Weekly Average	
Flow, MGD	NA	NA	NA	Design Flow = 2.0 MGD		
$CBOD_5$, mg/l	NA	NA	NA	20	30	
TSS, mg/l	NA	NA	NA	30	45	
Fecal Coliform, N/100 ml	NA	NA	NA	200	400	
Ammonia (as N), mg/l	NA	NA	NA	10 20	15 30	Summer Winter
Dissolved Oxygen, mg/l	NA	NA	NA	Not less than 7		
pH, standard units	NA	NA	NA	6.0 - 9.0		
Total Phosphorus, mg/l	NA	NA	NA	1.0 2.0		Summer Winter
Chronic Toxicity TU_c					5.63*	
Additional Parameters				See PART I, Page I-2		

* Reported Discharge values are not applicable. This is a new regional facility.

Summer: May 1 through October 31
Winter: November 1 through April 30

* Daily Max
NA - Not Applicable

4. **METHODOLOGY USED IN DETERMINING LIMITATIONS**

a. Serial Number

Outfall 001 Municipal Wastewater

b. Effluent Characteristics

Flow 2.0 (MGD)

Conventional Pollutants: Biochemical Oxygen Demand (5-day), Total Suspended Solids, Fecal Coliform, pH, Ammonia Nitrogen, Dissolved Oxygen, and Total Phosphorus.

c. Pertinent Factors

This municipality does not have an approved pretreatment program; therefore, there is no suspected source of any additional pollutants that have a reasonable potential to exceed water quality standards.

Total Residual Chlorine monitoring and limitations do not apply to this plant. The disinfection method will be ultra-violet irradiation.

d. Monitoring Requirements

Flow monitoring shall be conducted continuously by instantaneous measurement. Monitoring is consistent with 401 KAR 5:065 Sections 2 (8)(a).

Conventional Pollutants shall be monitored once per week: Biochemical Oxygen Demand (5-day), Total Suspended Solids, Fecal Coliform, pH, Ammonia Nitrogen, and Dissolved Oxygen, and Total Phosphorus. Monitoring is consistent with 401 KAR 5:065 Sections 2 (8)(a).

Pollutants to be monitored at the same frequency as the biomonitoring: Total Recoverable Cadmium, Total Recoverable Copper, Total Recoverable Lead, Total Recoverable Zinc, and Hardness as Calcium Carbonate.

Chronic Toxicity: This parameter's monitoring frequency has been set at quarterly rather than monthly because there is no pretreatment program for this new major facility.

e. Justification of Limits

The Kentucky regulations cited below have been duly promulgated pursuant to the requirements of Chapter 224 of the Kentucky Revised Statutes.

Flow
The design capacity and monitoring requirements are consistent with 401 KAR 5:005.

Biochemical Oxygen Demand (5-day), Total Suspended Solids, Fecal Coliform, and pH
The effluent limitations for the above permit parameters are consistent with 401 KAR 5:045.

Ammonia Nitrogen, and Dissolved Oxygen
The effluent limitations for the above permit parameters are consistent with 401 KAR 5:031.

Total Phosphorus
The effluent monitoring requirements for the above permit parameter are consistent with 401 KAR 5:031. Effluent limitations shall become effective after two (2) full summers of monitoring after the effective date of the permit.

Total Recoverable Cadmium, Total Recoverable Copper, Total Recoverable Lead, Total Recoverable Zinc, and Hardness as Calcium Carbonate
The monitoring requirements for the above permit parameters are consistent with 401 KAR 5:031.

Toxicity, Chronic
The 2004 Steady State Wasteload Allocation Model generated the toxicity limit for this permit. The background data and results are included as Attachment A. The limits for chronic toxicity are consistent with 401 KAR 5:29 and 401 KAR 5:031.

5. **ANTIDEGRADATION:**

The development of this permit commenced prior to the April 12, 2005 EPA approval of Kentucky's Antidegradation Regulation promulgated on September 8, 2004. Therefore, previous antidegradation requirements are applicable. The conditions of 401 KAR 5:029, Section 1(1) have been satisfied by this permit action. A review under Section 1(2), (3), and (4) is not applicable.

6. **PROPOSED COMPLIANCE SCHEDULE FOR ATTAINING EFFLUENT LIMITATIONS**

The permittee will comply with all effluent limitations by the effective date of this permit.

7. **PROPOSED SPECIAL CONDITIONS WHICH WILL HAVE A SIGNIFICANT IMPACT ON THE DISCHARGE**

Sludge Management:

Requirements will be imposed, as applicable, governing the disposal of sewage sludge in accordance with 40 CFR Part 503 and 401 KAR Chapter 45.

8. **PERMIT DURATION**

Expires November 11, 2009. This expiration date will place the facility in the correct 5-year cycle as per the Kentucky Watershed Management Framework. In this instance, the permit is scheduled for reissuance in December 2009 for the Tradewater/Green Basin Management Unit.

9. **PERMIT INFORMATION**

The application, draft permit, fact sheet, public notice, comments received, and additional information is available from the Division of Water at 14 Reilly Road, Frankfort Office Park, Frankfort, Kentucky 40601.

10. **REFERENCES AND CITED DOCUMENTS**

All material and documents referenced or cited in this fact sheet are a part of the permit information as described above and are readily available at the Division of Water Central Office. Information regarding these materials may be obtained from the person listed below.

11. **CONTACT**

For further information on the draft permit or comment process, contact the individual identified on the Public Notice or the Permit Writer - Robert S. Clay, Jr. (502) 564-2225, extension 554, or email robert.clay@ky.gov.

12. **PUBLIC NOTICE INFORMATION**

Please refer to the attached Public Notice for details regarding the procedures for a final decision, deadline for comments and other information required by 401 KAR 5:075, Section 4(2)(e).

ATTACHMENT A - SSTWAM2004 FOR KY0105791 OHIO COUNTY REGIONAL WWTP

Permit Writer	RSC	
Date Entered	1/4/2006	
Facility Name	Ohio County Regional WWTP	
KPDES Number	KY0105791	
Outfall Number	001	
Case Number	1	
Is this an Existing facility, an Increase or a New facility?	e	
Receiving Water Name	Rough River	
Discharge Mile Point	26.7	
Public Water Supply Name	Livermore Water Works	
Intake Water Name	Green River	
Intake Mile Point	71.28	
Total Effluent Flow (Q_T)	2	MGD
Receiving Water 7Q10 (Q_{RW7Q10})	43	cfs
Receiving Water Harmonic Mean (Q_{RWHM})	230	cfs
Receiving Water pH	7.6	
Intake Water 7Q10 (Q_{IW7Q10})	600	cfs
Intake Water Harmonic Mean (Q_{IWHM})	4329	cfs
Effluent Hardness	104	(as mg/l CaCO3)
Receiving Water Hardness	130	(as mg/l CaCO3)
Zone of Initial Dilution (ZID)	1	
Mixing Zone (MZ)	0.333	
Acute to Chronic Ratio (ACR)	0.1	
Impaired	No	
Permittee agrees to accept no mixing zone for bioaccumulative or persistent pollutants prior to 09/08/2014	No	

Calculation Methodology

Definitions

Acute to Chronic Ratio	ACR	Total Effluent Flow	Q_T
Aquatic Life Acute Criteria	C_A	Receiving Water 7Q10	Q_{RW7Q10}
Aquatic Life Chronic Criteria	C_C	Receiving Water Harmonic Mean	Q_{RWHM}
Human Health Criteria - Fish Only	C_{HHFO}	Intake Water 7Q10	Q_{IW7Q10}
Human Health Criteria - Fish & Water	C_{HHFW}	Intake Water Harmonic Mean	Q_{IWHM}
End of Pipe Effluent Limit	C_T	Zone of Initial Dilution	ZID
Instream Background Concentration	C_U	Mixing Zone	MZ
Toxicity Units - Acute	TU_a	Toxicity Units - Chronic	TU_c
Effluent Hardness	H_T	Receiving Water Hardness	H_{RW}

Aquatic Life - Chemical Specific

Acute | **Chronic Mixing Zone / Complete Mix**

NO ZID given $C_T = C_A$

ZID given $C_T = (C_A - C_U) \times (ZID)$

$$C_T = \{C_C[Q_T + (MZ)(Q_{RW7Q10})] - [C_U(MZ)(Q_{RW7Q10})]/Q_T\}$$

Human Health - Chemical Specific

Fish Only: Mixing Zone / Complete Mix

Carcinogen / Non-Carcinogen

$$C_T = \{C_{HHFO}[Q_T + (MZ)(Q_{RWHM})] - C_U(MZ)(Q_{RWHM})\}/Q_T$$

Fish & Water Only: Mixing Zone / Applicable at point of withdrawal

Carcinogen

$$C_T = \{C_{HHFW}[Q_T + (Q_{IWHM})] - C_U(Q_{IWHM})\}/Q_T$$

Non-Carcinogen

$$C_T = \{C_{HHFW}[Q_T + (Q_{IW7Q10})] - C_U(Q_{IW7Q10})\}/Q_T$$

Aquatic Life - Whole Effluent Toxicity

Acute (Units TU_a)

NO ZID given CT = CA

ZID given $C_T = (C_A - C_U) \times (ZID)$

Chronic Mixing Zone / Complete Mix (Units TU_c)

$$C_T = \{C_C[Q_T + (MZ)(Q_{RW7Q10})] - [C_U(MZ)(Q_{RW7Q10})]/Q_T\}$$

Conversion of TU_c to TU_a: $TU_c \times ACR = TU_a$

Metal Aquatic Criteria

Pollutant	Acute Criteria	Chronic Criteria
Total Recoverable Cadmium	$e^{(1.0166 (\ln Hardness) - 3.924)}$	$e^{(0.7409 (\ln Hardness) - 4.719)}$
Chromium III	$e^{(0.8190 (\ln Hardness) + 3.7256)}$	$e^{(0.8190 (\ln Hardness) + 0.6848)}$
Total Recoverable Copper	$e^{(0.9422 (\ln Hardness) - 1.700)}$	$e^{(0.8545 (\ln Hardness) - 1.702)}$
Total Recoverable Lead	$e^{(1.273 (\ln Hardness) - 1.460)}$	$e^{(1.273 (\ln Hardness) - 4.705)}$
Total Recoverable Nickel	$e^{(0.8460 (\ln Hardness) + 2.255)}$	$e^{(0.8460(\ln Hardness) + 0.0584)}$
Total Recoverable Silver	$e^{(1.72 (\ln Hardness) - 6.59)}$	
Total Recoverable Zinc	$e^{(0.8473 (\ln Hardness) + 0.884)}$	$e^{(0.8473 (\ln Hardness) + 0.884)}$

Hardness (as mg/l $CaCO_3$)

Zone Initial Dilution (ZID)

$$H_{RW} + [H_T + H_{RW}]/ZID$$

Mixing Zone

$$[(Q_{RW7Q10})(MZ)(H_{RW}) + (Q_T)(H_T)]/[(QRW7Q10)(MZ)+(QT)]$$

Bioaccumulative or Persistent

For new facilities after September 8, 2004 mixing zones shall not be granted for bioaccumulative or persistent pollutants of concern.

Mixing zones for bioaccumulative or persistent pollutants of concerned assigned prior to September 8, 2004 shall expire no later than September 8, 2014, unless the permittee agrees to expiration of the mixing zone prior to that date.

Therefore, the application of the more stringent criteria of Human Health Fish & Water Consumption, Human Health Fish Only Consumption, and Aquatic Life Chronic shall apply as end-of-pipe effluent limitations.

Antidegradation

If a new facility or an existing facility that will have a pollutant load increase, the effluent limits are halved unless the receiving stream is impaired or the permittee has demonstrated a negative socioeconomic or cost benefit analysis.

Reasonable Potential Analysis

In establishing water quality based effluent conditions the Division of Water must determine if the pollutant concentrations in the discharge will cause, have the reasonable potential to cause, or contribute to an excursion of any water standard. The process by which the Division of Water makes this determination is known as a Reasonable Potential Analysis.

A Reasonable Potential Analysis is performed by first calculating the expected effluent limitations for those pollutants with wa quality criteria. The calculated limits are then compared to the concentrations reported on the KPDES permit application an a summarization of the values reported on the Discharge Monitoring Report (DMRs) submitted during the term of the permit This comparison is made by dividing the reported value by the calculated effluent limitation and converting to a percentage. The following criteria are used in determining how the pollutant will be addressed in the permit.

New Permits or New Pollutants on Permit Renewals

If the reported concentration is less than 70% of the calculated effluent limit then no monitoring or limitations will be required

If the reported concentration is equal to or greater than 70% but less than 90% of the calculated effluent limit then monitorin will be required.

If the reported concentration is equal to or greater than 90% and the number of analysis reported on the KPDES permit application is less than 12 then monitoring will be required.

If the reported concentration is equal to or greater than 90% and the number of analysis reported on the KPDES permit application is equal or greater than 12 then an effluent limitation will be required.

Permit Renewals - Existing Pollutants

If the reported concentration is less than 70% of the calculated effluent limit then and the source of the reported concentratic was the DMRs for that facility and there were more than 12 DMRs utilized to determine the reported concentrations then the pollutant will be removed from the permit.

If the reported concentration is equal to or greater than 70% but less than 90% of the calculated effluent limit then monitorin will be required.

If the reported concentration is equal to or greater than 90% then an effluent limitation will be required.

In all cases, the Division of Water still may exercise its Best Professional Judgment in the implementation of the results.

Effluent Limitations

Parameter	CAS Number	Carcinogen	Bioaccumulative or Persistent	Average	Units	Justification	Maximum	Units	Justification
Total Recoverable Cadmium	7440439	No	No	0.0018	mg/l	Chronic	0.0022	mg/l	Acute
Total Recoverable Copper	7440508	No	No	0.0643	mg/l	Chronic	0.0145	mg/l	Acute
Total Recoverable Lead	7439921	No	No	0.0242	mg/l	Chronic	0.0858	mg/l	Acute
Total Recoverable Zinc	7440666	No	No	0.8242	mg/l	Chronic	0.1239	mg/l	Acute

Hardness	Chronic	Acute
Metal limitations are developed using the mixed hardness of the effluent and receiving waters	126.81	104

Toxicity

Type of Test	Maximum	Units	Justification
Chronic	5.63	TUc	Chronic

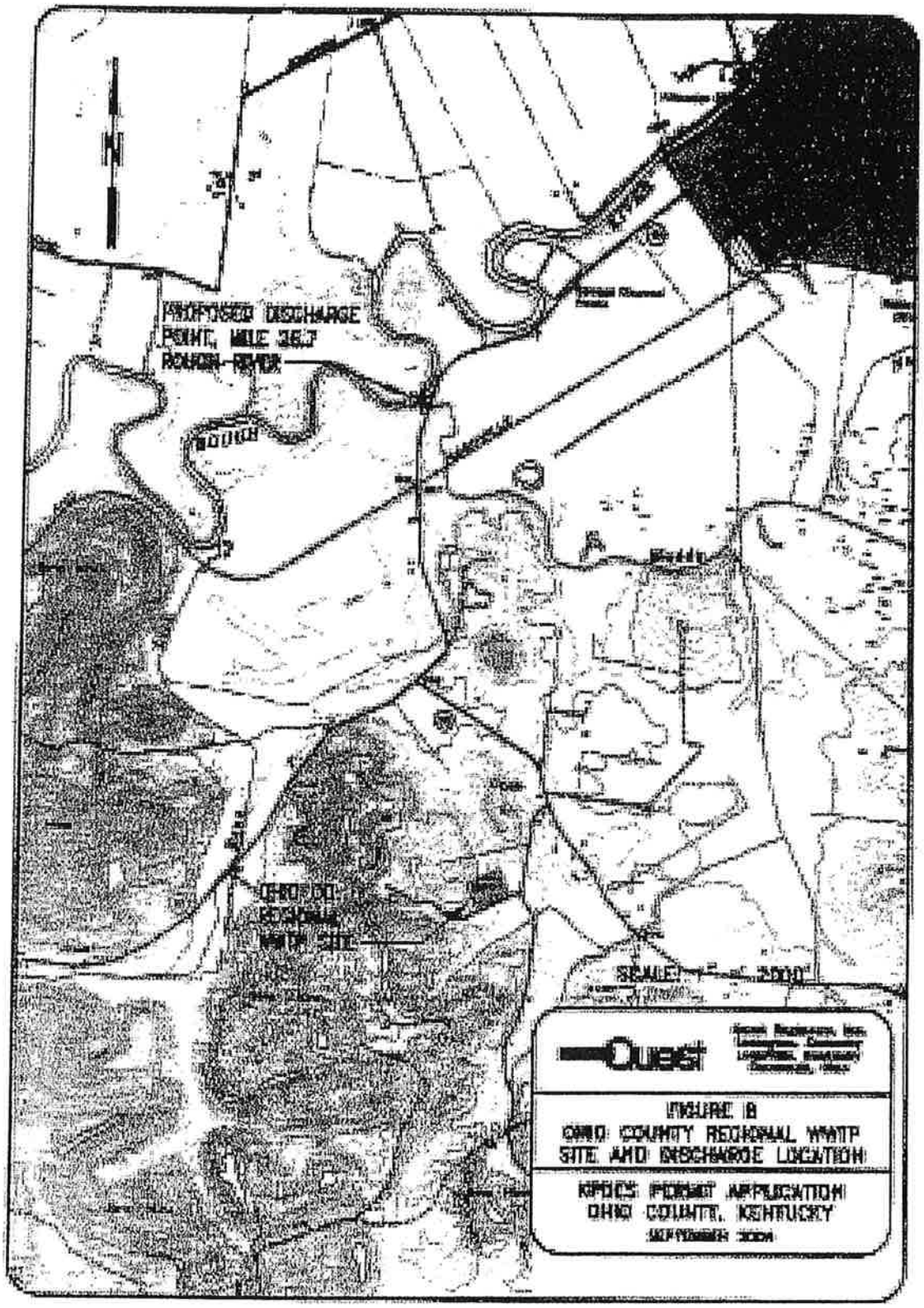
PROPOSED DISCHARGE
POINT, MILE 36.7
ROUGH RIVER
SCALE: 1" = 2000'
Quest
FIGURE 8
OHIO COUNTY REGIONAL WWTP
SITE AND DISCHARGE LOCATION
KPDES PERMIT APPLICATION
OHIO COUNTY, KENTUCKY

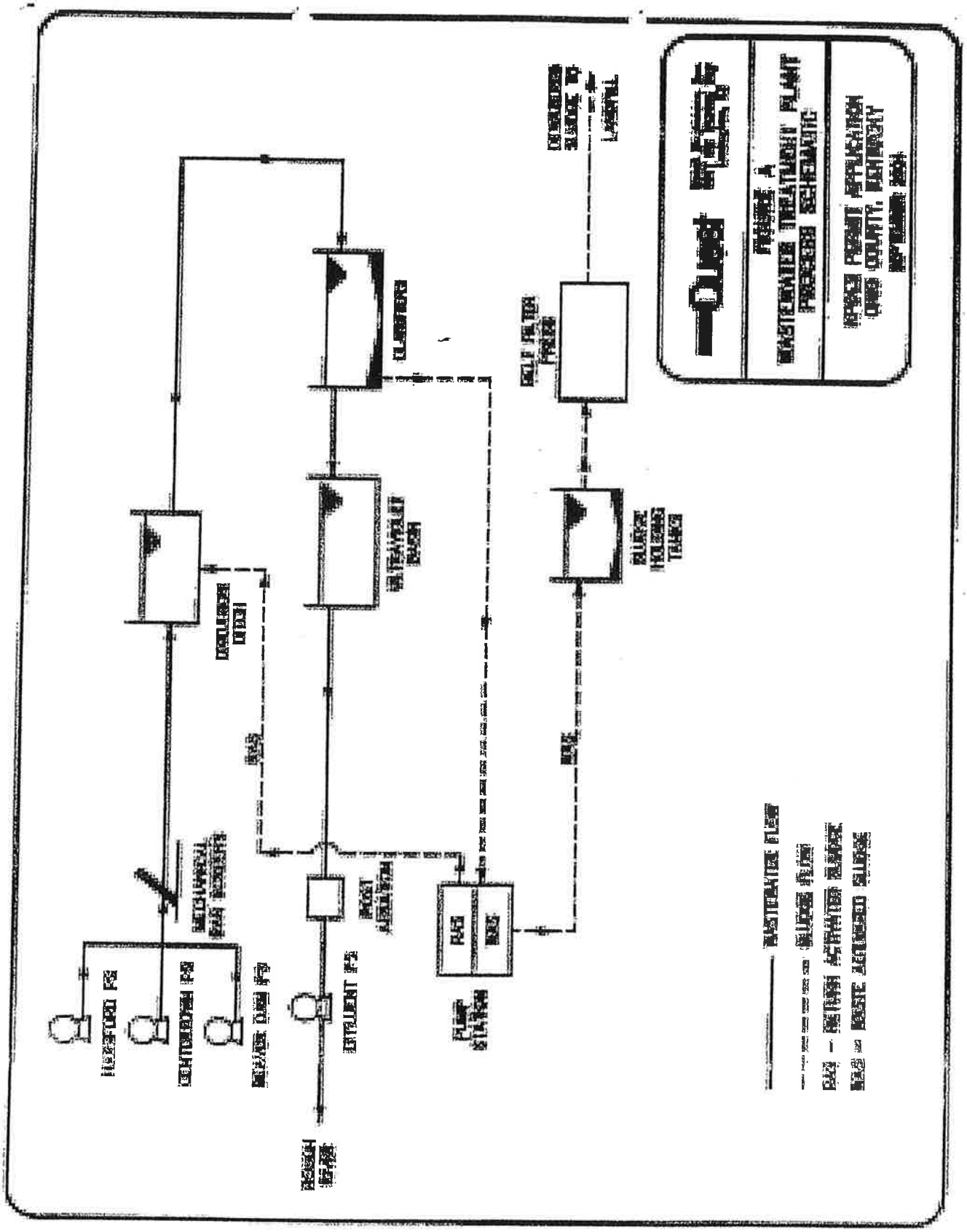

KPDES

KENTUCKY POLLUTANT DISCHARGE ELIMINATION SYSTEM

PERMIT

PERMIT NO.: KY0105791
AI NO.: 44279

AUTHORIZATION TO DISCHARGE UNDER THE KENTUCKY POLLUTANT DISCHARGE ELIMINATION SYSTEM

Pursuant to Authority in KRS 224,

Ohio County Regional
Wastewater District, Inc.
1500 Bill Monroe Memorial Boulevard
Beaver Dam, KY 42340-0307

DRAFT

is authorized to discharge from a facility located at

Ohio County Regional
Wastewater Treatment Plant
Landfill Road
Beaver Dam, Ohio County, Kentucky

to receiving waters named

Rough River at mile point 26.7

in accordance with effluent limitations, monitoring requirements and other conditions set forth in Parts I, II, III, and IV hereof. The permit consists of this cover sheet, and Part I 3 pages, Part II 2 pages, Part III 1 page, and Part IV 3 pages.

This permit shall become effective on

This permit and the authorization to discharge shall expire at midnight, November 30, 2009

Date Signed

David W. Morgan, Director
Division of Water

Lloyd R. Cress
Commissioner

A. EFFLUENT LIMITATIONS AND MONITORING REQUIREMENTS

During the period beginning on the effective date of this permit and lasting through the term of this permit, the permittee is authorized to discharge from Outfall serial number: 001, Municipal Discharge.

Such discharges shall be limited and monitored by the permittee as specified below:

EFFLUENT CHARACTERISTICS		DISCHARGE LIMITATIONS lbs/day Monthly Avg.	lbs/day Weekly Avg.	Other Units (Specify) Monthly Avg.	Other Units (Specify) Weekly Avg.	MONITORING REQUIREMENTS Measurement Frequency	Sample Type	Sampling Location
Flow, Design (2.0 MGD)		N/A	N/A	Report	Report*	Continuous	N/A	Influent & Effluent
Biochemical Oxygen Demand (5-day), Carbonaceous		333.6	500.4	20 mg/l	30 mg/l	1/Week	Composite	Influent & Effluent
Total Suspended Solids		500.4	750.6	30 mg/l	45 mg/l	1/Week	Composite	Influent & Effluent
Fecal Coliform Bacteria, N/100		N/A	N/A	200	400	1/Week	Grab	Effluent
Ammonia (as N)	Summer	166.8	250.2	10 mg/l	15 mg/l	1/Week	Composite	Influent & Effluent
	Winter	333.6	500.4	20 mg/l	30 mg/l			
Total Phosphorus (as P), mg/l								
	Summer	N/A	N/A	1.0 mg/l	Report*	1/Week	Composite	Influent & Effluent
	Winter	N/A	N/A	2.0 mg/l	Report*			
Dissolved Oxygen shall not be less than 7 mg/l						1/Week	Grab	Effluent
Chronic Toxicity TU_c					5.63*	1/Quarter	Composite	Effluent

In addition to the specified limits, the monthly average effluent $CBOD_5$ and suspended solids concentration shall not exceed 15% of the respective monthly average influent concentration (85% removal).
The pH of the effluent shall not be less than 6.0 standard units nor greater than 9.0 standard units and shall be monitored thrice per week by grab sample.
There shall be no discharge of floating solids or visible foam in other than trace amounts.
The effluent shall not cause a visible sheen on the receiving water.
Summer is May 1 through October 31.
Winter is November 1 through April 30.
* Daily maximum limitation

A. EFFLUENT LIMITATIONS AND MONITORING REQUIREMENTS (CONTINUATION)

During the period beginning on the effective date of this permit and lasting through the term of this permit, the permittee is authorized to discharge from Outfall serial number: 001, Municipal Discharge.

Such discharges shall be limited and monitored by the permittee as specified below:

EFFLUENT CHARACTERISTICS	DISCHARGE LIMITATIONS				MONITORING REQUIREMENTS		
	lbs/day		mg/l				
	Monthly Avg.	Daily Max.	Monthly Avg.	Daily Max.	Measurement Frequency	Sample Type	Sampling Location
Lead, Total Recoverable	N/A	N/A	Report	Report	1/Quarter*	Composite	Effluent
Cadmium, Total Recoverable	N/A	N/A	Report	Report	1/Quarter*	Composite	Effluent
Copper, Total Recoverable	N/A	N/A	Report	Report	1/Quarter*	Composite	Effluent
Zinc, Total Recoverable	N/A	N/A	Report	Report	1/Quarter*	Composite	Effluent
Hardness as Calcium Carbonate ($CaCO_3$)	N/A	N/A	Report	Report	1/Quarter*	Composite	Effluent

* Monitoring shall be done in conjunction with biomonitoring.

B. SCHEDULE OF COMPLIANCE

The permittee shall report phosphorus results upon completion of the plant. After two (2) full summers of monitoring, the permittee shall comply with any phosphorus limitations imposed by DOW.

The permittee shall achieve compliance with all other requirements and limitations on the effective date of this permit.

STANDARD CONDITIONS FOR KPDES PERMIT

The permittee is also advised that all KPDES permit conditions in KPDES Regulation 401 KAR 5:065, Section 1 will apply to all discharges authorized by this permit.

This permit has been issued under the provisions of KRS Chapter 224 and regulations promulgated pursuant thereto. Issuance of this permit does not relieve the permittee from the responsibility of obtaining any other permits or licenses required by this Cabinet and other state, federal and local agencies.

It is the responsibility of the permittee to demonstrate compliance with permit parameter limitations by utilization of sufficiently sensitive analytical methods.

SPECIAL POTW REQUIREMENTS

NOTE: The following requirements apply only to Publicly-Owned Treatment Works.

SLUDGE DISPOSAL

Sludge shall be disposed of in accordance with 40 CFR Part 503 and 401 KAR 45.

PROHIBITIVE DISCHARGES

Under no circumstances shall the permittee allow discharge of the following into the system:

a. Pollutants which create a fire or explosion hazard in the publicly owned treatment works (POTW);

b. Pollutants which will cause corrosive structural damage to the POTW, but in no case, discharges with a pH lower than 5.0;

c. Solid or viscous pollutants in amounts which will cause obstruction to the flow in sewers, or other interference with operation of the POTW;

d. Any pollutant, including oxygen demanding pollutants (BOD_5, etc.), released in a discharge at such a volume or strength as to cause interference in the POTW;

e. Heat in amounts which will inhibit biological activity in the POTW, but in no case, heat in such quantities that the influent to the sewage treatment works exceeds 104° F (40° C);

f. Petroleum oil, nonbiodegradable cutting oil, or products of mineral oil origin in amounts that will cause interference or pass through;

g. Pollutants which result in the presence of toxic gases, vapors, or fumes within the POTW in a quantity that may cause acute worker health and safety problems; and,

h. Any trucked or hauled waste, except at discharge points designated by the POTW.

Industrial Pretreatment Standards

The permittee shall provide annual reports to the Permit Issuing Authority listing industrial users of the system and identifying any problems caused by these users. Yearly reports are due no later than December 31 of each year, unless otherwise specified by the permitting authority.

The permittee may be required to develop a local pretreatment program to enforce the requirement of applicable industrial discharges to meet the Federal Categorical Standards of 40 CFR Part 403, and other requirements pursuant to state regulation 401 KAR 5:057, Section 6.

OTHER REQUIREMENTS

A. Reporting of Monitoring Results

Monitoring results obtained during each monitoring period must be reported on a preprinted Discharge Monitoring Report (DMR) Form that will be mailed to you. The completed DMR for each monitoring period must be sent to the Division of Water at the address listed below (with a copy to the appropriate Regional Office) postmarked no later than the 28th day of the month following the monitoring period for which monitoring results were obtained.

Division of Water
Bowling Green Regional Office
1508 Western Avenue
Bowling Green, Kentucky 42104
ATTN: Supervisor

Environmental & Public Protection Cabinet
Dept. for Environmental Protection
Division of Water/KPDES Branch
14 Reilly Road, Frankfort Office Park
Frankfort, Kentucky 40601

B. Reopener Clause

This permit shall be modified, or alternatively revoked and reissued, to comply with any applicable effluent standard or limitation issued or approved under 401 KAR 5:050 through 5:080 and KRS 224, if the effluent standard or limitation so issued or approved:

1. Contains different conditions or is otherwise more stringent than any effluent limitation in the permit; or

2. Controls any pollutant not limited in the permit.

The permit as modified or reissued under this paragraph shall also contain any other requirements of KRS Chapter 224 when applicable.

PART IV
CHRONIC CONCERNS
Biomonitoring

In accordance with PART I of this permit, the permittee shall initiate, within 30 days of the effective date of this permit, or continue the series of tests described below to evaluate wastewater toxicity of the discharge from Outfall 001.

1. Test Requirements

A. The permittee shall perform one (1) short-term fathead minnow (Pimephales promelas) growth test and one (1) short-term daphnid (Ceriodaphnia sp.) life-cycle test. Tests shall be conducted with appropriate replicates of XX% effluent, a control and a minimum of four (4) evenly spaced effluent concentrations. If the permit limit is less than 100% effluent and greater than or equal to 75% effluent, then one (1) concentration should be 100%. If the permit limit is less than 75% effluent, the permit limit concentration shall be bracketed with two (2) concentrations above and two (2) concentrations below. The selection of the effluent concentrations is subject to revision by the Division. Controls shall be tested concurrently with effluent testing using a synthetic water. The analysis will be deemed reasonable and good only if the minimum control requirements are met (i.e.$\geq$80% survival; 60% adults with 3 broods and 15 or more young/surviving female for the Ceriodaphnia test; an average 0.25 mg weight for the minnow growth test). Any test that does not meet the control acceptability criteria shall be repeated as soon as practicable within the monitoring period (i.e. monthly or quarterly). Noncompliance with the toxicity limit will be demonstrated if the IC_{25} (inhibition concentration) for reproduction or growth is less than XX% effluent

B. Tests shall be conducted on both species at the frequency specified in PART I of this permit.

A minimum of three (3) twenty-four hour composite samples will be collected at a frequency of one (1) sample every other day, or at a frequency to be determined by the permitting authority. For example, the first sample would be used for test initiation, day 1, and for test solution renewal on day 2. The second sample would be used for test solution renewal on days 3 and 4. The third sample would be used for test solution renewal on days 5, 6, and 7. The lapsed time from collection of the last aliquot of the composite and its first use for test initiation, or for test solution renewal shall not exceed 36 hours. Composite samples shall be refrigerated during collection and maintained at 6°C until used.

If after at least six (6) tests, it can be determined that Ceriodaphnia or the Fathead minnow is more sensitive, a request for testing of only that organism can be made to the Division. Upon approval, that organism can be chosen as representative and all subsequent tests can be conducted on only that organism.

2. Reporting Requirements

Results of all tests conducted with any organism shall be reported according to the most recent format provided by the Division of Water (Appendix 10 of 'Methods for Culturing and Conducting Toxicity Tests with *Pimephales promelas* and *Ceriodaphnia dubia* (Fifth Edition)' KDOW, January 2002). Test results shall be submitted to the Division of Water with the next regularly scheduled discharge monitoring report.

3. Chronic Toxicity

If noncompliance with the toxicity limit occurs (IC_{25} for reproduction or growth is less than XX% effluent), the permittee must conduct a second test within 15 days of the first failure. This test will be used in evaluating the persistence of the toxic event and the possible need for a toxicity reduction evaluation (TRE).

If the second test demonstrates noncompliance with the toxicity limit, the permittee will be required to perform accelerated testing as specified in the following paragraphs.

Complete four (4) additional tests within 90 days of failure of the second test to evaluate the frequency and degree of toxicity. The results of the two (2) tests specified above and of the four (4) additional tests will be used for purposes of this evaluation.

If results from two (2) of any six (6) tests show a significant noncompliance with the chronic limit ($\geq$1.2 times the TU_c), or results from four (4) of any six (6) tests show chronic toxicity (as defined in 1.A), a Toxicity Reduction Evaluation (TRE) will be required.

The permittee shall provide written notification, within five (5) days of the completion of accelerated testing to the Division of Water, that toxicity persisted and that a TRE would be initiated or that toxicity did not persist and the normal testing would resume.

Should toxicity not prove persistent during the accelerated testing, but reoccur within 12 months of the initial failure at a level $\geq$ 1.2 time the TU_c, then a TRE shall be initiated without further accelerated testing.

4. Toxicity Reduction Evaluation (TRE)

Having determined the effluent to be toxic, the permittee shall develop and implement an acceptable plan for the identification and treatability of the toxicant(s) within 90 days of completion of accelerated testing. The plan shall be developed in accordance with EPA guidance provided in the following EPA publications and submitted for DEP review and comment:

Clarifications Regarding Toxicity Reduction and Identification Evaluations in the National Pollutant Discharge Elimination System Program. March 27, 2001.

Toxicity Reduction Evaluation Guidance For Municipal Wastewater Treatment Plants. August 1999.

Methods for Aquatic Toxicity Identification Evaluations: Phase I Toxicity Characterization Procedures. February 1991.

Methods for Aquatic Toxicity Identification Evaluations: Phase II Toxicity Identification Procedures. February 1989.

Methods for Aquatic Toxicity Identification Evaluations: Phase III Toxicity Confirmation Procedures. February 1989.

Generalized Methodology for Conducting Industrial Toxicity Reduction Evaluations (TREs). March 1989.

Abstracts of Toxicity Reduction Evaluations. March 1989.

The plan shall include Toxic Identification Evaluation (TIE) procedures, treatability studies, and evaluations of: chemical usage including changes in types, handling and suppliers; operational and process procedures; housekeeping and maintenance activities; and raw materials. The TRE will establish an implementation schedule not to exceed 24 months for completion of these activities. The implementation schedule shall include monthly progress reports and a final report.

Upon the completion of the TRE, the permittee shall submit a final report detailing the findings of the TRE and the actions to be taken to prevent the reoccurrence of toxicity. This final report shall include: the toxicant(s), if any are identified; treatment options; operational changes; and the proposed resolutions including an implementation schedule not to exceed 180 days.

Should the permittee determine the toxicant(s) and/or a workable treatment prior to the conclusion of the TRE, the permittee will notify, within five (5) days, the Division of Water and take appropriate actions to implement the solution within 180 days of determination.

5. Test Methods

All test organisms, procedures and quality assurance criteria used shall be in accordance with Short-term Methods for Estimating the Chronic Toxicity of Effluents and Receiving Waters to Freshwater Organisms (Fourth Edition), EPA-821-R-02-013, or the most recent edition of this publication.

Appendix B

SSTWAM Output File

Date of Run
7/3/2008

Steady State Toxics
Wasteload Allocation Model

Non-Pollutant Data Output

Permit Writer	J. Spradlin	
Date Entered	1/22/2008	
Facility Name	)hio Co. Regional WWTI	
KPDES Number	KY0105791	
Outfall Number	001	
Case	Pretreatment	
Status:		
Is this an existing facility – Enter "E"		
Is this an existing facility with an increase in pollutant load – Enter "I"		
Is this a new facility – Enter "N"		
Is this a regional facility with an approved up-to-date 201 plan – Enter "R"		
Has the permittee made a successful alternatives analysis/socioeconomic demonstration – Enter "A"		
Receiving Water Name	New	
Discharge Mile Point	Rough River	
Public Water Supply Name	954-197.2-71.3-26.7	
Intake Water Name	Livermore Water Works	
Intake Mile Point	Livermore Water Works	
Total Effluent Flow (Q_T)	954-197.2-71.28	
Receiving Water 7Q10 (Q_{RW7Q10})	2	MGD
Receiving Water Harmonic Mean (Q_{RWHM})	38	cfs
Receiving Water pH	230	cfs
Receiving Water Temperature	7.6	SU
Intake Water 7Q10 (Q_{IW7Q10})	20.00	°C
Intake Water Harmonic Mean (Q_{IWHM})	600	cfs
Effluent Hardness	4329	cfs
Receiving Water Hardness	104	(as mg/l CaCO3)
Zone of Initial Dilution (ZID)	130	(as mg/l CaCO3)
Mixing Zone (MZ)	1	
Acute to Chronic Ratio (ACR)	0	
Impaired	0.1	
Permittee agrees to accept no mixing zone for bioaccumulative or persistent pollutants prior to 09/08/2014	no	
	yes	

Calculation Methodology

Definitions

Acute to Chronic Ratio	ACR	Total Effluent Flow	Q_T
Aquatic Life Acute Criteria	C_A	Receiving Water 7Q10	Q_{RW7Q10}
Aquatic Life Chronic Criteria	C_C	Receiving Water Harmonic Mean	Q_{RWHM}
Human Health Criteria - Fish Only	C_{HHFO}	Intake Water 7Q10	Q_{IW7Q10}
Human Health Criteria - Fish & Water	C_{HHFW}	Intake Water Harmonic Mean	Q_{IWHM}
End of Pipe Effluent Limit	C_T	Zone of Initial Dilution	ZID
Instream Background Concentration	C_U	Mixing Zone	MZ
Toxicity Units - Acute	TU_a	Toxicity Units - Chronic	TU_c
Effluent Hardness	H_T	Receiving Water Hardness	H_{RW}

Date of Run
7/3/2008

Steady State Toxics
Wasteload Allocation Model

Non-Pollutant Data Output

Aquatic Life - Chemical Specific

Acute
NO ZID given $C_T = C_A$
ZID given $C_T = (C_A - C_U) \times (ZID)$

Chronic Mixing Zone / Complete Mix
$C_T = \{C_C[Q_T + (MZ)(Q_{RW7Q10})] - [C_U(MZ)(Q_{RW7Q10})]\}/Q_T$

Human Health - Chemical Specific

Fish Only: Mixing Zone / Complete Mix
Carcinogen / Non-Carcinogen

$C_T = \{C_{HHFO}[Q_T + (MZ)(Q_{RWHM})] - C_U(MZ)(Q_{RWHM})\}/Q_T$

Fish & Water Only: Mixing Zone / Applicable at point of withdrawal
Carcinogen
Non-Carcinogen

$C_T = \{C_{HHFW}[Q_T + (Q_{IWHM})] - C_U(Q_{IWHM})\}/Q_T$
$C_T = \{C_{HHFW}[Q_T + (Q_{IW7Q10})] - C_U(Q_{IW7Q10})\}/Q_T$

Aquatic Life - Whole Effluent Toxicity

Acute (Units TU_a)
NO ZID given CT = CA
ZID given $C_T = (C_A - C_U) \times (ZID)$

Chronic Mixing Zone / Complete Mix (Units TUc)
$C_T = \{C_C[Q_T + (MZ)(Q_{RW7Q10})] - [C_U(MZ)(Q_{RW7Q10})]\}/Q_T$
Conversion of TU_c to TU_a: $TU_c \times ACR = TU_a$

Metal Aquatic Criteria

Pollutant	Acute Criteria	Chronic Criteria
Total Recoverable Cadmium	$e^{(1.0166 (\ln Hardness) - 3.924)}$	$e^{(0.7409 (\ln Hardness) - 4.719)}$
Chromium III	$e^{(0.8190 (\ln Hardness) + 3.7256)}$	$e^{(0.8190 (\ln Hardness) + 0.6848)}$
Total Recoverable Copper	$e^{(0.9422 (\ln Hardness) - 1.700)}$	$e^{(0.8545 (\ln Hardness) - 1.702)}$
Total Recoverable Lead	$e^{(1.273 (\ln Hardness) - 1.460)}$	$e^{(1.273 (\ln Hardness) - 4.705)}$
Total Recoverable Nickel	$e^{(0.8460 (\ln Hardness) + 2.255)}$	$e^{(0.8460(\ln Hardness) + 0.0584)}$
Total Recoverable Silver	$e^{(1.72 (\ln Hardness) - 6.59)}$	
Total Recoverable Zinc	$e^{(0.8473 (\ln Hardness) + 0.884)}$	$e^{(0.8473 (\ln Hardness) + 0.884)}$

Hardness (as mg/l $CaCO_3$)
Zone Initial Dilution (ZID) $H_{RW} + [H_T + H_{RW}]/ZID$
Mixing Zone $[(Q_{RW7Q10})(MZ)(H_{RW}) + (Q_T)(H_T)]/[(QRW7Q10)(MZ)+(QT)]$

Total Ammonia Criteria

Chronic - applies state wide - unionzed criteria of 0.05 mg/l $[0.05*(1+10^{(pka-pH)})]/1.2$ pka=(0.0902+(2730/(273.1+T)) T = Temperature °C

Acute - applies to the Ohio River (ORSANCO Criteria) $[0.411/(1+10^{(7.204-pH)})]+[58.4/(1+10^{(pH-7.204)})]$

Bioaccumulative or Persistent

For new facilities after September 8, 2004 mixing zones shall not be granted for bioaccumulative or persistent pollutants of concern.

Mixing zones for bioaccumulative or persistent pollutants of concerned assigned prior to September 8, 2004 shall expire no later than September 8, 2014, unless the permittee agrees to expiration of the mixing zone prior to that date.

Therefore, the application of the more stringent criteria of Human Health Fish & Water Consumption, Human Health Fish Only Consumption, and Aquatic Life Chronic shall apply as end-of-pipe effluent limitations.

Antidegradation

If a new facility or an existing facility that will have a pollutant load increase, the effluent limits are halved unless the receiving stream is impaired or the permittee has demonstrated a negative socioeconomic or cost benefit analysis.

Reasonable Potential Analysis

In establishing water quality based effluent conditions the Division of Water must determine if the pollutant concentrations in the discharge will cause, have the reasonable potential to cause, or contribute to an excursion of any water standard. The process by which the Division of Water makes this determination is known as a Reasonable Potential Analysis.

A Reasonable Potential Analysis is performed by first calculating the expected effluent limitations for those pollutants with water quality criteria. The calculated limits are then compared to the concentrations reported on the KPDES permit application and/or a summarization of the values reported on the Discharge Monitoring Report (DMRs) submitted during the term of the permit. This comparison is made by dividing the reported value by the calculated effluent limitation and converting to a percentage. The following criteria are used in determining how the pollutant will be addressed in the permit.

New Permits or New Pollutants on Permit Renewals

If the reported concentration is less than 70% of the calculated effluent limit then no monitoring or limitations will be required.

If the reported concentration is equal to or greater than 70% but less than 90% of the calculated effluent limit then monitoring will be required.

If the reported concentration is equal to or greater than 90% and the number of analysis reported on the KPDES permit application is less than 12 then monitoring will be required.

If the reported concentration is equal to or greater than 90% and the number of analysis reported on the KPDES permit application is equal or greater than 12 then an effluent limitation will be required.

Permit Renewals - Existing Pollutants

If the reported concentration is less than 70% of the calculated effluent limit then and the source of the reported concentration was the DMRs for that facility and there were more than 12 DMRs utilized to determine the reported concentrations then the pollutant will be removed from the permit.

If the reported concentration is equal to or greater than 70% but less than 90% of the calculated effluent limit then monitoring will be required.

If the reported concentration is equal to or greater than 90% then an effluent limitation will be required.

In all cases, the Division of Water still may exercise its Best Professional Judgment in the implementation of the results.

Parameter	CAS Number	Reported Discharge (mg/l)		Calculated Effluent Limitations (mg/l)		Reasonable Potential		Data Source	No. of Samples	Effluent Requirement		Justification	
		Average	Maximum	Average	Maximum	Average	Maximum			Average	Maximum	Average	Maximum
Chloride	16887006	0.000000	0.000000	800.000000	1,200.000000	0.00%	0.00%	No Data	0	None	None	Chronic	Acute
Total Residual Chlorine		0.000000	0.000000	0.011000	0.019000	0.00%	0.00%	No Data	0	None	None	Chronic	Acute
Color		0.000000	0.000000	14.610000	NA	0.00%	0.00%	No Data	0	None	None	HH DWS	NA
Fluoride		0.000000	0.000000	389.600000	NA	0.00%	0.00%	No Data	0	None	None	HH DWS	NA
Nitrate-Nitrite (as N)	14797558	0.000000	0.000000	1,948.000000	NA	0.00%	0.00%	No Data	0	None	None	HH DWS	NA
Total Alpha		0.000000	0.000000	NA	15.000000	0.00%	0.00%	No Data	0	None	None	NA	Acute
Total Beta		0.000000	0.000000	NA	50.000000	0.00%	0.00%	No Data	0	None	None	NA	Acute
Total Radium		0.000000	0.000000	NA	5.000000	0.00%	0.00%	No Data	0	None	None	NA	Acute
Sulfate (as SO4)		0.000000	0.000000	48,700.000000	NA	0.00%	0.00%	No Data	0	None	None	HH DWS	NA
Surfactants		0.000000	0.000000	97.400000	NA	0.00%	0.00%	No Data	0	None	None	HH DWS	NA
Total Recoverable Barium	7440393	0.000000	0.000000	194.800000	NA	0.00%	0.00%	No Data	0	None	None	HH DWS	NA
Total Recoverable Iron	7439896	0.000000	0.000000	1.000000	4.000000	0.00%	0.00%	No Data	0	None	None	Chronic	Acute
Total Recoverable Antimony	7440360	0.000000	0.000000	0.640000	NA	0.00%	0.00%	No Data	0	None	None	HH Fish	NA
Total Recoverable Arsenic	7440382	0.000000	0.000000	0.150000	0.340000	0.00%	0.00%	No Data	0	None	None	Chronic	Acute
Total Recoverable Beryllium	7440417	0.000000	0.000000	0.779200	NA	0.00%	0.00%	No Data	0	None	None	HH DWS	NA
Total Recoverable Cadmium	7440439	0.000000	0.000000	0.000279	0.002220	0.00%	0.00%	No Data	0	None	None	Chronic	Acute
Total Recoverable Chromium	7440439	0.000000	0.000000	19.480000	NA	0.00%	0.00%	No Data	0	None	None	HH DWS	NA
Total Recoverable Copper	7440508	0.000000	0.000000	0.009647	0.014526	0.00%	0.00%	No Data	0	None	None	Chronic	Acute
Total Recoverable Lead	7439921	0.000000	0.000000	0.003344	0.085825	0.00%	0.00%	No Data	0	None	None	Chronic	Acute
Total Recoverable Mercury	7439976	0.000000	0.000000	0.000051	0.001700	0.00%	0.00%	No Data	0	None	None	HH Fish	Acute
Total Recoverable Nickel	7440020	0.000000	0.000000	0.053923	0.485003	0.00%	0.00%	No Data	0	None	None	Chronic	Acute
Total Recoverable Selenium	7782492	0.000000	0.000000	0.005000	0.020000	0.00%	0.00%	No Data	0	None	None	Chronic	Acute
Total Recoverable Silver	7440224	0.000000	0.000000	NA	0.004049	0.00%	0.00%	No Data	0	None	None	NA	Acute
Total Recoverable Thallium	7440280	0.000000	0.000000	0.006300	NA	0.00%	0.00%	No Data	0	None	None	HH Fish	NA
Total Recoverable Zinc	7440666	0.000000	0.000000	0.123865	0.123865	0.00%	0.00%	No Data	0	None	None	Chronic	Acute
Free Cyanide	57125	0.000000	0.000000	0.005200	0.022000	0.00%	0.00%	No Data	0	None	None	Chronic	Acute
2,3,7,8 Tetrachlorodibenzo P Dioxin	1746016	0.000000	0.000000	0.000000	NA	0.00%	0.00%	No Data	0	None	None	HH Fish	NA
Acrolein	107028	0.000000	0.000000	0.290000	NA	0.00%	0.00%	No Data	0	None	None	HH Fish	NA
Acrylonitrile	107131	0.000000	0.000000	0.000250	NA	0.00%	0.00%	No Data	0	None	None	HH Fish	NA
Benzene	71432	0.000000	0.000000	0.051000	NA	0.00%	0.00%	No Data	0	None	None	HH Fish	NA
Bromoform	75252	0.000000	0.000000	0.140000	NA	0.00%	0.00%	No Data	0	None	None	HH Fish	NA
Carbon Tetrachloride	56235	0.000000	0.000000	0.001600	NA	0.00%	0.00%	No Data	0	None	None	HH Fish	NA
Chlorobenzene	108907	0.000000	0.000000	21.000000	NA	0.00%	0.00%	No Data	0	None	None	HH Fish	NA
Chlorodibromomethane	124481	0.000000	0.000000	0.013000	NA	0.00%	0.00%	No Data	0	None	None	HH Fish	NA
Chloroform	67663	0.000000	0.000000	0.470000	NA	0.00%	0.00%	No Data	0	None	None	HH Fish	NA
Dichlorobromomethane	75274	0.000000	0.000000	0.017000	NA	0.00%	0.00%	No Data	0	None	None	HH Fish	NA
1,2-Dichloroethane	107062	0.000000	0.000000	0.037000	NA	0.00%	0.00%	No Data	0	None	None	HH Fish	NA
1,1-Dichloroethylene	75354	0.000000	0.000000	0.003200	NA	0.00%	0.00%	No Data	0	None	None	HH Fish	NA
1,2-Dichloropropane	78875	0.000000	0.000000	0.015000	NA	0.00%	0.00%	No Data	0	None	None	HH Fish	NA
1,3-Dichloropropene	542756	0.000000	0.000000	1.700000	NA	0.00%	0.00%	No Data	0	None	None	HH Fish	NA
Ethylbenzene	100414	0.000000	0.000000	29.000000	NA	0.00%	0.00%	No Data	0	None	None	HH Fish	NA
Methyl Bromide	74839	0.000000	0.000000	1.500000	NA	0.00%	0.00%	No Data	0	None	None	HH Fish	NA
Methylene Chloride	75092	0.000000	0.000000	0.590000	NA	0.00%	0.00%	No Data	0	None	None	HH Fish	NA
1,1,2,2-Tetrachloroethane	79345	0.000000	0.000000	0.004000	NA	0.00%	0.00%	No Data	0	None	None	HH Fish	NA
Tetrachloroethylene	127184	0.000000	0.000000	0.003300	NA	0.00%	0.00%	No Data	0	None	None	HH Fish	NA
Toluene	108883	0.000000	0.000000	200.000000	NA	0.00%	0.00%	No Data	0	None	None	HH Fish	NA
1,2-Trans-Dichloroethylene	156605	0.000000	0.000000	140.000000	NA	0.00%	0.00%	No Data	0	None	None	HH Fish	NA
1,1,1-Trichloroethane	71556	0.000000	0.000000	38.960000	NA	0.00%	0.00%	No Data	0	None	None	HH DWS	NA
1,1,2-Trichloroethane	79005	0.000000	0.000000	0.016000	NA	0.00%	0.00%	No Data	0	None	None	HH Fish	NA
Trichloroethylene	79016	0.000000	0.000000	0.030000	NA	0.00%	0.00%	No Data	0	None	None	HH Fish	NA
Vinyl Chloride	75014	0.000000	0.000000	0.530000	NA	0.00%	0.00%	No Data	0	None	None	HH Fish	NA
2-Chlorophenol	95578	0.000000	0.000000	0.150000	NA	0.00%	0.00%	No Data	0	None	None	HH Fish	NA
2,4-Dichlorophenol	120832	0.000000	0.000000	0.290000	NA	0.00%	0.00%	No Data	0	None	None	HH Fish	NA
2,4-Dimethylphenol	105679	0.000000	0.000000	0.850000	NA	0.00%	0.00%	No Data	0	None	None	HH Fish	NA
2,4-Dinitrophenol	51285	0.000000	0.000000	5.300000	NA	0.00%	0.00%	No Data	0	None	None	HH Fish	NA
Pentachlorophenol	87865	0.000000	0.000000	0.003000	NA	0.00%	0.00%	No Data	0	None	None	HH Fish	NA
Phenol	108952	0.000000	0.000000	1,700.000000	NA	0.00%	0.00%	No Data	0	None	None	HH Fish	NA
2,4,6-Trichlorophenol	88062	0.000000	0.000000	0.002400	NA	0.00%	0.00%	No Data	0	None	None	HH Fish	NA
Acenaphthene	83329	0.000000	0.000000	0.990000	NA	0.00%	0.00%	No Data	0	None	None	HH Fish	NA
Anthracene	120127	0.000000	0.000000	40.000000	NA	0.00%	0.00%	No Data	0	None	None	HH Fish	NA

Parameter	CAS Number	Reported Discharge (mg/l)		Calculated Effluent Limitations (mg/l)		Reasonable Potential		Data Source	No. of Samples	Effluent Requirement		Justification	
		Average	Maximum	Average	Maximum	Average	Maximum			Average	Maximum	Average	Maximum
Benzidine	92875	0.000000	0.000000	0.000000	NA	0.00%	0.00%	No Data	0	None	None	HH Fish	NA
Benzo(a)anthracene	56553	0.000000	0.000000	0.000018	NA	0.00%	0.00%	No Data	0	None	None	HH Fish	NA
Benzo(a)pyrene	50328	0.000000	0.000000	0.000018	NA	0.00%	0.00%	No Data	0	None	None	HH Fish	NA
Benzo(k)fluoranthene	205992	0.000000	0.000000	0.000018	NA	0.00%	0.00%	No Data	0	None	None	HH Fish	NA
Bis(2-chloroisopropyl)ether	108601	0.000000	0.000000	65.000000	NA	0.00%	0.00%	No Data	0	None	None	HH Fish	NA
Bis(2-ethylhexyl)phthalate	117817	0.000000	0.000000	0.002200	NA	0.00%	0.00%	No Data	0	None	None	HH Fish	NA
Butylbenzyl phthalate	85687	0.000000	0.000000	1.900000	NA	0.00%	0.00%	No Data	0	None	None	HH Fish	NA
2-Chloronaphthalene	91587	0.000000	0.000000	1.600000	NA	0.00%	0.00%	No Data	0	None	None	HH Fish	NA
Chrysene	218019	0.000000	0.000000	0.000018	NA	0.00%	0.00%	No Data	0	None	None	HH Fish	NA
Dibenzo(a,h)anthracene	53703	0.000000	0.000000	0.000018	NA	0.00%	0.00%	No Data	0	None	None	HH Fish	NA
1,2-Dichlorobenzene	95501	0.000000	0.000000	17.000000	NA	0.00%	0.00%	No Data	0	None	None	HH Fish	NA
1,3-Dichlorobenzene	541731	0.000000	0.000000	0.960000	NA	0.00%	0.00%	No Data	0	None	None	HH Fish	NA
1,4-Dichlorobenzene	106467	0.000000	0.000000	2.600000	NA	0.00%	0.00%	No Data	0	None	None	HH Fish	NA
3,3-Dichlorobenzidine	91941	0.000000	0.000000	0.000028	NA	0.00%	0.00%	No Data	0	None	None	HH Fish	NA
Diethyl phthalate	84662	0.000000	0.000000	44.000000	NA	0.00%	0.00%	No Data	0	None	None	HH Fish	NA
Dimethyl phthalate	131113	0.000000	0.000000	1,100.000000	NA	0.00%	0.00%	No Data	0	None	None	HH Fish	NA
Di-n-butyl phthalate	84742	0.000000	0.000000	4.500000	NA	0.00%	0.00%	No Data	0	None	None	HH Fish	NA
2,4-Dinitrotoluene	121142	0.000000	0.000000	0.003400	NA	0.00%	0.00%	No Data	0	None	None	HH Fish	NA
1,2-Diphenylhydrazine	122667	0.000000	0.000000	0.000200	NA	0.00%	0.00%	No Data	0	None	None	HH Fish	NA
Fluoranthene	206440	0.000000	0.000000	0.140000	NA	0.00%	0.00%	No Data	0	None	None	HH Fish	NA
Fluorene	86737	0.000000	0.000000	5.300000	NA	0.00%	0.00%	No Data	0	None	None	HH Fish	NA
Hexachlorobenzene	118741	0.000000	0.000000	0.000000	NA	0.00%	0.00%	No Data	0	None	None	HH Fish	NA
Hexachlorobutadiene	87683	0.000000	0.000000	0.018000	NA	0.00%	0.00%	No Data	0	None	None	HH Fish	NA
Hexachlorocyclopentadiene	77474	0.000000	0.000000	17.000000	NA	0.00%	0.00%	No Data	0	None	None	HH Fish	NA
Hexachloroethane	67721	0.000000	0.000000	0.003300	NA	0.00%	0.00%	No Data	0	None	None	HH Fish	NA
Ideno(1,2,3-cd)pyrene	193395	0.000000	0.000000	0.000018	NA	0.00%	0.00%	No Data	0	None	None	HH Fish	NA
Isophorone	78591	0.000000	0.000000	0.960000	NA	0.00%	0.00%	No Data	0	None	None	HH Fish	NA
Nitrobenzene	98953	0.000000	0.000000	0.690000	NA	0.00%	0.00%	No Data	0	None	None	HH Fish	NA
N-Nitrosodimethylamine	62759	0.000000	0.000000	0.000965	NA	0.00%	0.00%	No Data	0	None	None	HH DWS	NA
N-Nitrosodi-n-Propylamine	621647	0.000000	0.000000	0.000510	NA	0.00%	0.00%	No Data	0	None	None	HH Fish	NA
N-Nitrosodiphenylamine	86306	0.000000	0.000000	0.006000	NA	0.00%	0.00%	No Data	0	None	None	HH Fish	NA
Pyrene	129000	0.000000	0.000000	4.000000	NA	0.00%	0.00%	No Data	0	None	None	HH Fish	NA
1,2,4-Trichlorobenzene	120821	0.000000	0.000000	0.940000	NA	0.00%	0.00%	No Data	0	None	None	HH Fish	NA
Aldrin	309002	0.000000	0.000000	0.000000	0.003000	0.00%	0.00%	No Data	0	None	None	HH Fish	Acute
alpha-BHC	319846	0.000000	0.000000	0.000005	NA	0.00%	0.00%	No Data	0	None	None	HH Fish	NA
Beta-BHC	319857	0.000000	0.000000	0.000017	NA	0.00%	0.00%	No Data	0	None	None	HH Fish	NA
gamma-BHC (Lindane)	58899	0.000000	0.000000	0.000063	0.000950	0.00%	0.00%	No Data	0	None	None	HH Fish	Acute
Chlordane	57749	0.000000	0.000000	0.000001	0.002400	0.00%	0.00%	No Data	0	None	None	HH Fish	Acute
4,4'-DDT	50293	0.000000	0.000000	0.000000	0.001100	0.00%	0.00%	No Data	0	None	None	HH Fish	Acute
4,4'-DDE	72559	0.000000	0.000000	0.000000	NA	0.00%	0.00%	No Data	0	None	None	HH Fish	NA
4,4'-DDD	72548	0.000000	0.000000	0.000000	NA	0.00%	0.00%	No Data	0	None	None	HH Fish	NA
Dieldrin	60571	0.000000	0.000000	0.000000	0.000240	0.00%	0.00%	No Data	0	None	None	HH Fish	Acute
Alpha-Endosulfan	959988	0.000000	0.000000	0.000056	0.000220	0.00%	0.00%	No Data	0	None	None	Chronic	Acute
Beta-Endosulfan	33213659	0.000000	0.000000	0.000056	0.000220	0.00%	0.00%	No Data	0	None	None	Chronic	Acute
Endosulfan sulfate	1031078	0.000000	0.000000	0.089000	NA	0.00%	0.00%	No Data	0	None	None	HH Fish	NA
Endrin	72208	0.000000	0.000000	0.000036	0.000086	0.00%	0.00%	No Data	0	None	None	Chronic	Acute
Endrin aldehyde	7421934	0.000000	0.000000	0.000300	NA	0.00%	0.00%	No Data	0	None	None	HH Fish	NA
Heptachlor	76448	0.000000	0.000000	0.000000	0.000520	0.00%	0.00%	No Data	0	None	None	HH Fish	Acute
Heptachlor epoxide	1024573	0.000000	0.000000	0.000000	0.000520	0.00%	0.00%	No Data	0	None	None	HH Fish	Acute
Polychlorinated Biphenyls (PCBs)		0.000000	0.000000	0.000000	NA	0.00%	0.00%	No Data	0	None	None	HH Fish	NA
Toxaphene	8001352	0.000000	0.000000	0.000000	0.000730	0.00%	0.00%	No Data	0	None	None	Chronic	Acute
1,2,4,5-Tetrachlorobenzene	95943	0.000000	0.000000	0.001100	NA	0.00%	0.00%	No Data	0	None	None	HH Fish	NA
2-methyl-4,6-dinitrophenol	534521	0.000000	0.000000	0.280000	NA	0.00%	0.00%	No Data	0	None	None	HH Fish	NA
2,4-D	94757	0.000000	0.000000	97.948890	NA	0.00%	0.00%	No Data	0	None	None	HH DWS	NA
2,4,5-TP (Silvex)	93721	0.000000	0.000000	1.948000	NA	0.00%	0.00%	No Data	0	None	None	HH DWS	NA
2,4,5-trichlorophenol	95954	0.000000	0.000000	3.600000	NA	0.00%	0.00%	No Data	0	None	None	HH Fish	NA
Asbestos	1332214	0.000000	0.000000	9,794,869.000000	NA	0.00%	0.00%	No Data	0	None	None	HH DWS	NA
Benzo(b)fluoranthene	205992	0.000000	0.000000	0.000018	NA	0.00%	0.00%	No Data	0	None	None	HH Fish	NA
Bis(2-chloroethyl)ether	111444	0.000000	0.000000	0.000530	NA	0.00%	0.00%	No Data	0	None	None	HH Fish	NA
Bis(chloromethyl)ether	542881	0.000000	0.000000	0.000000	NA	0.00%	0.00%	No Data	0	None	None	HH Fish	NA

Parameter	CAS Number	Reported Discharge (mg/l)		Calculated Effluent Limitations (mg/l)		Reasonable Potential		Data Source	No. of Samples	Effluent Requirement		Justification	
		Average	Maximum	Average	Maximum	Average	Maximum			Average	Maximum	Average	Maximum
Chloropyrifos	2921882	0.000000	0.000000	0.000041	0.000083	0.00%	0.00%	No Data	0	None	None	Chronic	Acute
Chromium (III)	16065831	0.000000	0.000000	0.088993	1.861906	0.00%	0.00%	No Data	0	None	None	Chronic	Acute
Chromium (VI)	18540299	0.000000	0.000000	0.011000	0.016000	0.00%	0.00%	No Data	0	None	None	Chronic	Acute
Demeton	8065483	0.000000	0.000000	0.000100	NA	0.00%	0.00%	No Data	0	None	None	Chronic	NA
Dinitrophenols	25550587	0.000000	0.000000	5.300000	NA	0.00%	0.00%	No Data	0	None	None	HH Fish	NA
Guthion	86500	0.000000	0.000000	0.000010	NA	0.00%	0.00%	No Data	0	None	None	Chronic	NA
Hexachlorocyclo-hexane-Technical	319868	0.000000	0.000000	0.000041	NA	0.00%	0.00%	No Data	0	None	None	HH Fish	NA
Hydrogen Sulfide, Undissociated	7783064	0.000000	0.000000	0.002000	NA	0.00%	0.00%	No Data	0	None	None	Chronic	NA
Malathion	121755	0.000000	0.000000	0.000100	NA	0.00%	0.00%	No Data	0	None	None	Chronic	NA
Methoxychlor	72435	0.000000	0.000000	0.000030	NA	0.00%	0.00%	No Data	0	None	None	Chronic	NA
Mirex	2385855	0.000000	0.000000	0.000001	NA	0.00%	0.00%	No Data	0	None	None	Chronic	NA
Nitrosamines, Other		0.000000	0.000000	0.000158	NA	0.00%	0.00%	No Data	0	None	None	HH DWS	NA
N-Nitrosodibutylamine	924163	0.000000	0.000000	0.000220	NA	0.00%	0.00%	No Data	0	None	None	HH Fish	NA
N-Nitrosodiethylamine	55185	0.000000	0.000000	0.001119	NA	0.00%	0.00%	No Data	0	None	None	HH DWS	NA
N-Nitrosopyrrolidine	930552	0.000000	0.000000	0.022388	NA	0.00%	0.00%	No Data	0	None	None	HH DWS	NA
Parathion	56382	0.000000	0.000000	0.000013	0.000065	0.00%	0.00%	No Data	0	None	None	Chronic	Acute
Pentachlorobenzene	608935	0.000000	0.000000	0.001500	NA	0.00%	0.00%	No Data	0	None	None	HH Fish	NA
Phthalate esters		0.000000	0.000000	0.003000	NA	0.00%	0.00%	No Data	0	None	None	Chronic	NA
Total Dissolved Solids		0.000000	0.000000	146,100.000000	NA	0.00%	0.00%	No Data	0	None	None	HH DWS	NA
Tritium		0.000000	0.000000	NA	20,000.000000	0.00%	0.00%	No Data	0	None	None	NA	Acute
Total Strontium-90		0.000000	0.000000	NA	8.000000	0.00%	0.00%	No Data	0	None	None	NA	Acute
Uranium		0.000000	0.000000	NA	0.030000	0.00%	0.00%	No Data	0	None	None	NA	Acute
Total Ammonia		0.000000	0.000000	2.678236	17.032201	0.00%	0.00%	No Data	0	None	None	Chronic	Acute

Hardness	Chronic	Acute
Metal limitations are developed using the mixed hardness of the effluent and receiving waters	104.00	104.00

Toxicity

Type of Test	Maximum	Units	Justification	Percent Effluent
Chronic	1.00	TUc	Chronic	100.00%

Parameter	CAS Number	Reported Discharge (mg/l)		Calculated Effluent Limitations (mg/l)		Reasonable Potential		Data Source	No. of Samples	Effluent Requirement		Justification	
		Average	Maximum	Average	Maximum	Average	Maximum			Average	Maximum	Average	Maximum
Chloride	16887006	0.000000	0.000000	600.000000	1,200.000000	0.00%	0.00%	No Data	0	None	None	Chronic	Acute
Total Residual Chlorine		0.000000	0.000000	0.011000	0.019000	0.00%	0.00%	No Data	0	None	None	Chronic	Acute
Total Recoverable Iron	7439896	0.000000	0.000000	1.000000	4.000000	0.00%	0.00%	No Data	0	None	None	Chronic	Acute
Total Recoverable Arsenic	7440382	0.000000	0.000000	0.150000	0.340000	0.00%	0.00%	No Data	0	None	None	Chronic	Acute
Total Recoverable Cadmium	7440439	0.000000	0.000000	0.000279	0.002220	0.00%	0.00%	No Data	0	None	None	Chronic	Acute
Total Recoverable Chromium	7440439	0.000000	0.000000	19.480000	NA	0.00%	0.00%	No Data	0	None	None	HH DWS	NA
Total Recoverable Copper	7440508	0.000000	0.000000	0.009647	0.014526	0.00%	0.00%	No Data	0	None	None	Chronic	Acute
Total Recoverable Lead	7439921	0.000000	0.000000	0.003344	0.085825	0.00%	0.00%	No Data	0	None	None	Chronic	Acute
Total Recoverable Mercury	7439976	0.000000	0.000000	0.000051	0.001700	0.00%	0.00%	No Data	0	None	None	HH Fish	Acute
Total Recoverable Nickel	7440020	0.000000	0.000000	0.053923	0.485003	0.00%	0.00%	No Data	0	None	None	Chronic	Acute
Total Recoverable Selenium	7782492	0.000000	0.000000	0.005000	0.020000	0.00%	0.00%	No Data	0	None	None	Chronic	Acute
Total Recoverable Silver	7440224	0.000000	0.000000	NA	0.004049	0.00%	0.00%	No Data	0	None	None	NA	Acute
Total Recoverable Zinc	7440666	0.000000	0.000000	0.123865	0.123865	0.00%	0.00%	No Data	0	None	None	Chronic	Acute
Free Cyanide	57125	0.000000	0.000000	0.005200	0.022000	0.00%	0.00%	No Data	0	None	None	Chronic	Acute
Chromium (VI)	18540299	0.000000	0.000000	0.011000	0.016000	0.00%	0.00%	No Data	0	None	None	Chronic	Acute

Hardness	Chronic	Acute
Metal limitations are developed using the mixed hardness of the effluent and receiving waters	104.00	104

Toxicity

Type of Test	Maximum	Units	Justification	Percent Effluent
Chronic	1.00	TUc	Chronic	100.00%

Parameter	CAS Number	Reported Discharge (mg/l)		Calculated Effluent Limitations (mg/l)		Reasonable Potential		Data Source	No. of Samples	Effluent Requirement		Justification	
		Average	Maximum	Average	Maximum	Average	Maximum			Average	Maximum	Average	Maximum
Chloride	16887006	0.000000	0.000000	600.000000	1,200.000000	0.00%	0.00%	No Data	0	None	None	Chronic	Acute
Total Residual Chlorine		0.000000	0.000000	0.011000	0.019000	0.00%	0.00%	No Data	0	None	None	Chronic	Acute
Total Recoverable Iron	7439896	0.000000	0.000000	1.000000	4.000000	0.00%	0.00%	No Data	0	None	None	Chronic	Acute
Total Recoverable Arsenic	7440382	0.000000	0.000000	0.150000	0.340000	0.00%	0.00%	No Data	0	None	None	Chronic	Acute
Total Recoverable Cadmium	7440439	0.000000	0.000000	0.000279	0.002220	0.00%	0.00%	No Data	0	None	None	Chronic	Acute
Total Recoverable Chromium	7440439	0.000000	0.000000	19.480000	NA	0.00%	0.00%	No Data	0	None	None	HH DWS	NA
Total Recoverable Copper	7440508	0.000000	0.000000	0.009647	0.014526	0.00%	0.00%	No Data	0	None	None	Chronic	Acute
Total Recoverable Lead	7439921	0.000000	0.000000	0.003344	0.085825	0.00%	0.00%	No Data	0	None	None	Chronic	Acute
Total Recoverable Mercury	7439976	0.000000	0.000000	0.000051	0.001700	0.00%	0.00%	No Data	0	None	None	HH Fish	Acute
Total Recoverable Nickel	7440020	0.000000	0.000000	0.053923	0.485003	0.00%	0.00%	No Data	0	None	None	Chronic	Acute
Total Recoverable Selenium	7782492	0.000000	0.000000	0.005000	0.020000	0.00%	0.00%	No Data	0	None	None	Chronic	Acute
Total Recoverable Silver	7440224	0.000000	0.000000	NA	0.004049	0.00%	0.00%	No Data	0	None	None	NA	Acute
Total Recoverable Zinc	7440666	0.000000	0.000000	0.123865	0.123865	0.00%	0.00%	No Data	0	None	None	Chronic	Acute
Free Cyanide	57125	0.000000	0.000000	0.005200	0.022000	0.00%	0.00%	No Data	0	None	None	Chronic	Acute
Chromium (VI)	18540299	0.000000	0.000000	0.011000	0.016000	0.00%	0.00%	No Data	0	None	None	Chronic	Acute

Hardness	Chronic	Acute
Metal limitations are developed using the mixed hardness of the effluent and receiving waters	104.00	104

Toxicity

Type of Test	Maximum	Units	Justification	Percent Effluent
Chronic	1.00	TUc	Chronic	100.00%

Appendix C

Tables for Local Limits Calculations

TABLE C1

Local Limits Determination Based on NPDES Daily Effluent Limits

Pollutant	ENVIRONMENTAL CRITERIA AND PROCESS DATA BASE						MAXIMUM LOADING		INDUSTRIAL		
	IU Pollut. Flow (MGD) (Qind)	POTW Flow (MGD) (Qpotw)	Removal Efficiency (%) (Rpotw)	NPDES Daily Limit (mg/l) (Ccrit)	Domestic and Commercial Conc. (mg/l) (Cdom)	Domestic and Commercial Flow (MGD) (Qdom)	Allowable Headworks (lbs/day) (Lhw)	Domestic/ Commercial (lbs/day) (Ldom)	Allowable Loading (lbs/day) (Lind)	Local Limit (mg/l) (Cind)	Safety Factor (%) (SF)
Arsenic	0.0336	0.900	45	0.15	0.001	0.866	2.047090909	0.007225776	1.835156042	6.54888961	10
Cadmium	0.0336	0.900	67	0.000279	0.001	0.866	0.006345982	0.007225776	-0.001514392	-0.0054042	10
Chromium	0.0336	0.900	82	19.48	0.001	0.866	812.316	0.007225776	731.0771742	2608.90279	10
Hex. Chrom.	0.0336	0.900	82	0.011	0.001	0.866	0.4587	0.007225776	0.405604224	1.44742857	10
Copper	0.0336	0.900	86	0.009647	0.1533	0.866	0.517217014	1.107711461	-0.642216148	-2.2917957	10
Cyanide	0.0336	0.900	69	0.0052	0.02	0.866	0.125907097	0.14451552	-0.031199133	-0.1113364	10
Iron	0.0336	0.900	60	1.000	0.02	0.866	18.765	0.14451552	16.74398448	59.7521429	10
Lead	0.0336	0.900	61	0.003344	0.005	0.866	0.064359138	0.03612888	0.021794345	0.07777473	10
Mercury	0.0336	0.900	60	0.000051	0.0002	0.866	0.000957015	0.001445155	-0.000583842	-0.0020835	10
Molybdenum	0.0336	0.900			0	0.866	-	0	-	-	10
Nickel	0.0336	0.900	42	0.053923	0.001	0.866	0.697837997	0.007225776	0.620828421	2.21547198	10
Selenium	0.0336	0.900	50	0.005	0.001	0.866	0.07506	0.007225776	0.060328224	0.21528571	10
Silver	0.0336	0.900	75		0.002	0.866	-	0.014451552	-	-	10
Zinc	0.0336	0.900	79	0.123865	0.002	0.866	4.427289	0.014451552	3.970108548	14.167625	10

(Qind) Industrial User total plant discharge flow in Million Gallons per Day (MGD) that contains a particular pollutant.
(Qpotw) POTW's average influent flow in MGD.
(Rpotw) Removal efficiency across POTW as percent.
(Ccrit) NPDES daily maximum permit limit for a particular pollutant in mg/l.
(Qdom) Domestic/commercial background flow in MGD.
(Cdom) Domestic/commercial background concentration for a particular pollutant in mg/l.
(Lhw) Maximum allowable headworks pollutant loading to the POTW in pounds per day (lbs/day).
(Ldom) Domestic/commercial background loading to the POTW for a particular pollutant in pounds per day (lbs/day).
(Lind) Maximum allowable industrial loading to the POTW in pounds per day.
(Cind) Industrial allowable local limit for a given pollutant in mg/l.
(SF) Safety factor as a percent.
8.34 Unit conversion factor

$$Lhw = \frac{8.34 * Ccrit * Qpotw}{1 - Rpotw}$$

|::

TABLE C2 NOT USED

Local Limits Determination Based on NPDES Monthly Effluent Limits

Pollutant	ENVIRONMENTAL CRITERIA AND PROCESS DATA BASE						MAXIMUM LOADING		INDUSTRIAL		
	IU Pollut. Flow (MGD) (Qind)	POTW Flow (MGD) (Qpotw)	Removal Efficiency (%) (Rpotw)	NPDES Monthly Limit (mg/l) (Ccrit)	Domestic and Commercial Conc. (mg/l) (Cdom)	Domestic and Commercial Flow (MGD) (Qdom)	Allowable Headworks (lbs/day) (Lhw)	Domestic/ Commercial (lbs/day) (Ldom)	Allowable Loading (lbs/day) (Lind)	Local Limit (mg/l) (Cind)	Safety Factor (%) (SF)
Arsenic	0.0336	0.9	45		0.001	0.8664	-	0.007225776	-	-	10
Cadmium	0.0336	0.9	67		0.001	0.8664	-	0.007225776	-	-	10
Chromium	0.0336	0.9	82		0.001	0.8664	-	0.007225776	-	-	10
Hex. Chrom.	0.0336	0.9	82		0.001	0.8664	-	0.007225776	-	-	10
Copper	0.0336	0.9	86		0.1533	0.8664	-	1.107711461	-	-	10
Cyanide	0.0336	0.9	69		0.02	0.8664	-	0.14451552	-	-	10
Iron	0.0336	0.9	60		0.02	0.8664	-	0.14451552	-	-	10
Lead	0.0336	0.9	61		0.005	0.8664	-	0.03612888	-	-	10
Mercury	0.0336	0.9	60		0.0002	0.8664	-	0.001445155	-	-	10
Molybdenum	0.0336	0.9	0		0	0.8664	-	0	-	-	10
Nickel	0.0336	0.9	42		0.001	0.8664	-	0.007225776	-	-	10
Selenium	0.0336	0.9	50		0.001	0.8664	-	0.007225776	-	-	10
Silver	0.0336	0.9	75		0.002	0.8664	-	0.014451552	-	-	10
Zinc	0.0336	0.9	79		0.002	0.8664	-	0.014451552	-	-	10

(Qind) Industrial User total plant discharge flow in Million Gallons per Day (MGD) that contains a particular pollutant.
(Qpotw) POTW's average influent flow in MGD.
(Rpotw) Removal efficiency across POTW as percent.
(Ccrit) NPDES monthly maximum permit limit for a particular pollutant in mg/l.
(Qdom) Domestic/commercial background flow in MGD.
(Cdom) Domestic/commercial background concentration for a particular pollutant in mg/l.
(Lhw) Maximum allowable headworks pollutant loading to the POTW in pounds per day (lbs/day).
(Ldom) Domestic/commercial background loading to the POTW for a particular pollutant in pounds per day (lbs/day).
(Lind) Maximum allowable industrial loading to the POTW in pounds per day.
(Cind) Industrial allowable local limit for a given pollutant in mg/l.
(SF) Safety factor as a percent.
8.34 Unit conversion factor

$$Lhw = \frac{8.34 * Ccrit * Qpotw}{1 - Rpotw}$$

TABLE C3

Local Limits Determination Based on Activated Sludge Inhibition Level

Pollutant	ENVIRONMENTAL CRITERIA AND PROCESS DATA BASE						MAXIMUM LOADING		INDUSTRIAL		
	IU Pollut. Flow (MGD) (Qind)	POTW Flow (MGD) (Qpotw)	Removal Efficiency (%) (Rprim)	Activated Sludge Inhibition Level (mg/l) (Ccrit)	Domestic and Commercial Conc. (mg/l) (Cdom)	Domestic and Commercial Flow (MGD) (Qdom)	Allowable Headworks (lbs/day) (Lhw)	Domestic/ Commercial (lbs/day) (Ldom)	Allowable Loading (lbs/day) (Lind)	Local Limit (mg/l) (Cind)	Safety Factor (%) (SF)
Arsenic	0.0336	0.9	45	0.1	0.001	0.8664	1.364727273	0.007225776	1.221028769	4.35733117	10
Cadmium	0.0336	0.9	67	1.0	0.001	0.8664	22.74545455	0.007225776	20.46368331	73.0261623	10
Chromium	0.0336	0.9	82	1.0	0.001	0.8664	41.7	0.007225776	37.52277422	133.902786	10
Hex. Chrom.	0.0336	0.9	82	1.0	0.001	0.8664	41.7	0.007225776	37.52277422	133.902786	10
Copper	0.0336	0.9	86	1.0	0.1533	0.8664	53.61428571	1.107711461	47.14514568	168.240928	10
Cyanide	0.0336	0.9	69	0.1	0.02	0.8664	2.421290323	0.14451552	2.03464577	7.26078341	10
Iron	0.0336	0.9	60		0.02	0.8664	-	0.14451552	-	-	10
Lead	0.0336	0.9	61	1.0	0.005	0.8664	19.24615385	0.03612888	17.28540958	61.6842582	10
Mercury	0.0336	0.9	60	0.1	0.0002	0.8664	1.8765	0.001445155	1.687404845	6.02162857	10
Molybdenum	0.0336	0.9			0	0.8664	-	0	-	-	10
Nickel	0.0336	0.9	42	1.0	0.001	0.8664	12.94137931	0.007225776	11.6400156	41.5382537	10
Selenium	0.0336	0.9	50		0.001	0.8664	-	0.007225776	-	-	10
Silver	0.0336	0.9	75		0.002	0.8664	-	0.014451552	-	-	10
Zinc	0.0336	0.9	79	0.3	0.002	0.8664	10.72285714	0.014451552	9.636119877	34.3872041	10

(Qind) Industrial User total plant discharge flow in Million Gallons per Day (MGD) that contains a particular pollutant.
(Qpotw) POTW's average influent flow in MGD.
(Rprim) Removal efficiency across across primary treatment as percent.
(Ccrit) Activated sludge threshold inhibition level, mg/l.
(Qdom) Domestic/commercial background flow in MGD.
(Cdom) Domestic/commercial background concentration for a particular pollutant in mg/l.
(Lhw) Maximum allowable headworks pollutant loading to the POTW in pounds per day (lbs/day).
(Ldom) Domestic/commercial background loading to the POTW for a particular pollutant in pounds per day (lbs/day).
(Lind) Maximum allowable industrial loading to the POTW in pounds per day.
(Cind) Industrial allowable local limit for a given pollutant in mg/l.
(SF) Safety factor as a percent.
8.34 Unit conversion factor

$$Lhw = \frac{8.34 * Ccrit * Qpotw}{1 - Rprim}$$

TABLE C4

Local Limits Determination Based on Nitrification Inhibition Level

Pollutant	ENVIRONMENTAL CRITERIA AND PROCESS DATA BASE						MAXIMUM LOADING		INDUSTRIAL		
	IU Pollut. Flow (MGD) (Qind)	POTW Flow (MGD) (Qpotw)	Removal Efficiency (%) (Rsec)	Nitrification Inhibition Level (mg/l) (Ccrit)	Domestic and Commercial Conc. (mg/l) (Cdom)	Domestic and Commercial Flow (MGD) (Qdom)	Allowable Headworks (lbs/day) (Lhw)	Domestic/ Commercial (lbs/day) (Ldom)	Allowable Loading (lbs/day) (Lind)	Local Limit (mg/l) (Cind)	Safety Factor (%) (SF)
Arsenic	0.0336	0.9	45	1.5	0.001	0.8664	20.47090909	0.007225776	18.41659241	65.7209675	10
Cadmium	0.0336	0.9	67	5.2	0.001	0.8664	118.2763636	0.007225776	106.4415015	379.844344	10
Chromium	0.0336	0.9	82	0.25	0.001	0.8664	10.425	0.007225776	9.375274224	33.4563571	10
Hex. Chrom.	0.0336	0.9	82	1.0	0.001	0.8664	41.7	0.007225776	37.52277422	133.902786	10
Copper	0.0336	0.9	86	0.05	0.1533	0.8664	2.680714286	1.107711461	1.304931396	4.65674388	10
Cyanide	0.0336	0.9	69	0.34	0.02	0.8664	8.232387097	0.14451552	7.264632867	25.9243779	10
Iron	0.0336	0.9	60		0.02	0.8664	-	0.14451552	-	-	10
Lead	0.0336	0.9	61	0.5	0.005	0.8664	9.623076923	0.03612888	8.624640351	30.7776648	10
Mercury	0.0336	0.9	60		0.0002	0.8664	-	0.001445155	-	-	10
Molybdenum	0.0336	0.9			0	0.8664	-	0	-	-	10
Nickel	0.0336	0.9	42	0.25	0.001	0.8664	3.235344828	0.007225776	2.904584569	10.3652241	10
Selenium	0.0336	0.9	50		0.001	0.8664	-	0.007225776	-	-	10
Silver	0.0336	0.9	75		0.002	0.8664	-	0.014451552	-	-	10
Zinc	0.0336	0.9	79	0.1	0.002	0.8664	3.574285714	0.014451552	3.202405591	11.4280204	10

(Qind) Industrial User total plant discharge flow in Million Gallons per Day (MGD) that contains a particular pollutant.
(Qpotw) POTW's average influent flow in MGD.
(Rsec) Removal efficiency across primary treatment and secodary treatment as percent.
(Ccrit) Nitrification threshold inhibition level, mg/l.
(Qdom) Domestic/commercial background flow in MGD.
(Cdom) Domestic/commercial background concentration for a particular pollutant in mg/l.
(Lhw) Maximum allowable headworks pollutant loading to the POTW in pounds per day (lbs/day).
(Ldom) Domestic/commercial background loading to the POTW for a particular pollutant in pounds per day (lbs/day).
(Lind) Maximum allowable industrial loading to the POTW in pounds per day.
(Cind) Industrial allowable local limit for a given pollutant in mg/l.
(SF) Safety factor as a percent.
8.34 Unit conversion factor

$$Lhw = \frac{8.34 * Ccrit * Qpotw}{1 - Rsec}$$

|::

TABLE C5 NOT USED

Local Limits Determination Based on USEPA 503 Sludge Regulations

Pollutant	ENVIRONMENTAL CRITERIA AND PROCESS DATA BASE								MAXIMUM LOADING		INDUSTRIAL		
	IU Pollut. Flow (MGD) (Qind)	POTW Flow (MGD) (Qpotw)	Sludge Flow (MGD) (Qsldg)	Percent Solids (%) (PS)	Removal Efficiency (%) (Rpotw)	503 Sludge Criteria (mg/kg) (Cslcrit)	Domestic and Conc. (mg/l) (Cdom)	Commercial Flow (MGD) (Qdom)	Allowable Headworks (lbs/day) (Lhw)	Domestic/ Commercial (lbs/day) (Ldom)	Allowable Loading (lbs/day) (Lind)	Local Limit (mg/l) (Cind)	Safety Factor (%) (SF)
Arsenic						41			#DIV/0!	0	#DIV/0!	#DIV/0!	10
Cadmium						39			#DIV/0!	0	#DIV/0!	#DIV/0!	10
Chromium									-	0	-	-	10
Hex. Chrom.									-	0	-	-	10
Copper						1500			#DIV/0!	0	#DIV/0!	#DIV/0!	10
Cyanide									-	0	-	-	10
Iron									-	0	-	-	10
Lead						300			#DIV/0!	0	#DIV/0!	#DIV/0!	10
Mercury						17			#DIV/0!	0	#DIV/0!	#DIV/0!	10
Molybdenum									-	0	-	-	10
Nickel						420			#DIV/0!	0	#DIV/0!	#DIV/0!	10
Selenium									-	0	-	-	10
Silver									-	0	-	-	10
Zinc						2800			#DIV/0!	0	#DIV/0!	#DIV/0!	10

(Qind) Industrial User total plant discharge flow in Million Gallons per Day (MGD) that contains a particular pollutant.
(Qpotw) POTW's average influent flow in MGD.
(Qsldg) Sludge flow to disposal in MGD.
(PS) Percent solids of sludge to disposal.
(Rpotw) Removal efficiency across POTW as a percent.
(Cslcrit) 503 sludge criteria in mg/kg dry sludge.
(Qdom) Domestic/commercial background flow in MGD.
(Cdom) Domestic/commercial background concentration for a particular pollutant in mg/l.
(Lhw) Maximum allowable headworks pollutant loading to the POTW in pounds per day (lbs/day).
(Ldom) Domestic/commercial background loading to the POTW for a particular pollutant in pounds per day (lbs/day).
(Lind) Maximum allowable industrial loading to the POTW in pounds per day.
(Cind) Industrial allowable local limit for a given pollutant in mg/l.
(SF) Safety factor as a percent.
8.34 Unit conversion factor

$$Lhw = \frac{8.34 * Cslcrit * (PS/100) * Qsldg}{Rpotw}$$

TABLE C6 NOT USED

Local Limits Determination Based on State Sludge Criteria

Pollutant	ENVIRONMENTAL CRITERIA AND PROCESS DATA BASE								MAXIMUM LOADING		INDUSTRIAL		
	IU Pollut. Flow (MGD) (Qind)	POTW Flow (MGD) (Qpotw)	Sludge Flow (MGD) (Qsldg)	Percent Solids (%) (PS)	Removal Efficiency (%) (Rpotw)	State Sludge Criteria (mg/kg) (Cslcrit)	Domestic and Commercial Conc. (mg/l) (Cdom)	Domestic and Commercial Flow (MGD) (Qdom)	Allowable Headworks (lbs/day) (Lhw)	Domestic/ Commercial (lbs/day) (Ldom)	Allowable Loading (lbs/day) (Lind)	Local Limit (mg/l) (Cind)	Safety Factor (%) (SF)
Arsenic	0.0336	0.9	0	0	45		0.001		-	0	-	-	10
Cadmium	0.0336	0.9	0	0	67	10	0.001		0	0	0	0	10
Chromium	0.0336	0.9	0	0	82		0.001		-	0	-	-	10
Hex. Chrom.	0.0336	0.9	0	0	82		0.001		-	0	-	-	10
Copper	0.0336	0.9	0	0	86	450	0.1533		0	0	0	0	10
Cyanide	0.0336	0.9	0	0	69		0.02		-	0	-	-	10
Iron	0.0336	0.9	0	0	60		0.02		-	0	-	-	10
Lead	0.0336	0.9	0	0	61	250	0.005		0	0	0	0	10
Mercury	0.0336	0.9	0	0	60		0.0002		-	0	-	-	10
Molybdenum	0.0336	0.9	0	0	0		0		-	0	-	-	10
Nickel	0.0336	0.9	0	0	42	50	0.001		0	0	0	0	10
Selenium	0.0336	0.9	0	0	50		0.001		-	0	-	-	10
Silver	0.0336	0.9	0	0	75		0.002		-	0	-	-	10
Zinc	0.0336	0.9	0	0	79	900	0.002		0	0	0	0	10
Manganese		0.9							-	0	-	-	10
Antimony		0.9							-	0	-	-	10

(Qind) Industrial User total plant discharge flow in Million Gallons per Day (MGD) that contains a particular pollutant.
(Qpotw) POTW's average influent flow in MGD.
(Qsldg) Sludge flow to disposal in MGD.
(PS) Percent solids of sludge to disposal.
(Rpotw) Removal efficiency across POTW as a percent.
(Cslcrit) State sludge criteria in mg/kg dry sludge.
(Qdom) Domestic/commercial background flow in MGD.
(Cdom) Domestic/commercial background concentration for a particular pollutant in mg/l.
(Lhw) Maximum allowable headworks pollutant loading to the POTW in pounds per day (lbs/day).
(Ldom) Domestic/commercial background loading to the POTW for a particular pollutant in pounds per day (lbs/day).
(Lind) Maximum allowable industrial loading to the POTW in pounds per day.
(Cind) Industrial allowable local limit for a given pollutant in mg/l.
(SF) Safety factor as a percent.
8.34 Unit conversion factor

$$Lhw = \frac{8.34 * Cslcrit * (PS/100) * Qsldg}{Rpotw}$$

TABLE C7

Local Limits Determination Based on Chronic Water Quality Standards

Pollutant	ENVIRONMENTAL CRITERIA AND PROCESS DATA BASE								MAXIMUM LOADING		INDUSTRIAL		
	IU Pollut. Flow (MGD) (Qind)	POTW Flow (MGD) (Qpotw)	Upstream Flow (MGD) (Qstr)	Upstream Conc. (mg/l) (Cstr)	Removal Efficiency (%) (Rpotw)	Chronic WQS (mg/l) (Ccrit)	Domestic and Conc. (mg/l) (Cdom)	Commercial Flow (MGD) (Qdom)	Allowable Headworks (lbs/day) (Lhw)	Domestic/ Commercial (lbs/day) (Ldom)	Allowable Loading (lbs/day) (Lind)	Local Limit (mg/l) (Cind)	Safety Factor (%) (SF)
Arsenic	0.0336	0.9	0	0	45	0.15	0.001	0.8664	2.047090909	0.00722578	1.835156042	6.54888961	10
Cadmium	0.0336	0.9	0	0	67	0.000279	0.001	0.8664	0.006345982	0.00722578	-0.001514392	-0.005404221	10
Chromium	0.0336	0.9	0	0	82	19.48	0.001	0.8664	812.316	0.00722578	731.0771742	2608.902786	10
Hex. Chrom.	0.0336	0.9	0	0	82	0.011	0.001	0.8664	0.4587	0.00722578	0.405604224	1.447428571	10
Copper	0.0336	0.9	0	0	86	0.009647	0.1533	0.8664	0.517217014	1.10771146	-0.642216148	-2.291795663	10
Cyanide	0.0336	0.9	0	0	69	0.0052	0.02	0.8664	0.125907097	0.14451552	-0.031199133	-0.111336406	10
Iron	0.0336	0.9	0	0	60	1.00	0.02	0.8664	18.765	0.14451552	16.74398448	59.75214286	10
Lead	0.0336	0.9	0	0	61	0.003344	0.005	0.8664	0.064359138	0.03612888	0.021794345	0.077774725	10
Mercury	0.0336	0.9	0	0	60	0.000051	0.0002	0.8664	0.000957015	0.00144516	-0.000583842	-0.002083482	10
Molybdenum	0.0336	0.9	0	0	0	0	0	0.8664	-	0	-	-	10
Nickel	0.0336	0.9	0	0	42	0.053923	0.001	0.8664	0.697837997	0.00722578	0.620828421	2.215471983	10
Selenium	0.0336	0.9	0	0	50	0.005	0.001	0.8664	0.07506	0.00722578	0.060328224	0.215285714	10
Silver	0.0336	0.9	0	0	75	0	0.002	0.8664	-	0.01445155	-	-	10
Zinc	0.0336	0.9	0	0	79	0.123865	0.002	0.8664	4.427289	0.01445155	3.970108548	14.167625	10

(Qind) Industrial User total plant discharge flow in Million Gallons per Day (MGD) that contains a particular pollutant.
(Qpotw) POTW's average influent flow in MGD.
(Qstr) Receiving stream (upstream) 7Q10 flow in MGD.
(Cstr) Receiving stream background level in mg/l.
(Rpotw) Removal efficiency across POTW as percent.
(Ccrit) State chronic water quality standard for a particular pollutant in mg/l.
(Qdom) Domestic/commercial background flow in MGD.
(Cdom) Domestic/commercial background concentration for a particular pollutant in mg/l.
(Lhw) Maximum allowable headworks pollutant loading to the POTW in pounds per day (lbs/day).
(Ldom) Domestic/commercial background loading to the POTW for a particular pollutant in pounds per day (lbs/day).
(Lind) Maximum allowable industrial loading to the POTW in pounds per day.
(Cind) Industrial allowable local limit for a given pollutant in mg/l.
(SF) Safety factor as a percent.
8.34 Unit conversion factor

$$Lhw = \frac{8.34 * (Ccrit * (Qstr + Qpotw) - (Cstr * Qstr))}{1 - Rpotw}$$

TABLE C8

Local Limits Determination Based on Acute Water Quality Standards

Pollutant	ENVIRONMENTAL CRITERIA AND PROCESS DATA BASE								MAXIMUM LOADING		INDUSTRIAL		
	IU Pollut. Flow (MGD) (Qind)	POTW Flow (MGD) (Qpotw)	Upstream Flow (MGD) (Qstr)	Upstream Conc. (mg/l) (Cstr)	Removal Efficiency (%) (Rpotw)	Acute WQS (mg/l) (Ccrit)	Domestic and Commercial Conc. (mg/l) (Cdom)	Domestic and Commercial Flow (MGD) (Qdom)	Allowable Headworks (lbs/day) (Lhw)	Domestic/ Commercial (lbs/day) (Ldom)	Allowable Loading (lbs/day) (Lind)	Local Limit (mg/l) (Cind)	Safety Factor (%) (SF)
Arsenic	0.0336	0.9	0	0	45	0.34	0.001	0.8664	4.640072727	0.00722578	4.168839679	14.87681169	10
Cadmium	0.0336	0.9	0	0	67	0.00222	0.001	0.8664	0.050494909	0.00722578	0.038219642	0.13638961	10
Chromium	0.0336	0.9	0	0	82	0	0.001	0.8664	-	0.00722578	-	-	10
Hex. Chrom.	0.0336	0.9	0	0	82	0.016	0.001	0.8664	0.6672	0.00722578	0.593254224	2.117071429	10
Copper	0.0336	0.9	0	0	86	0.014526	0.1533	0.8664	0.778801114	1.10771146	-0.406790458	-1.451661735	10
Cyanide	0.0336	0.9	0	0	69	0.022	0.02	0.8664	0.532683871	0.14451552	0.334899964	1.195115207	10
Iron	0.0336	0.9	0	0	60	4.00	0.02	0.8664	75.06	0.14451552	67.40948448	240.5557143	10
Lead	0.0336	0.9	0	0	61	0.085825	0.005	0.8664	1.651801154	0.03612888	1.450492158	5.176188187	10
Mercury	0.0336	0.9	0	0	60	0.0017	0.0002	0.8664	0.0319005	0.00144516	0.027265295	0.097298214	10
Molybdenum	0.0336	0.9	0	0	0	0	0	0.8664	-	0	-	-	10
Nickel	0.0336	0.9	0	0	42	0.485003	0.001	0.8664	6.27660779	0.00722578	5.641721235	20.13289809	10
Selenium	0.0336	0.9	0	0	50	0.02	0.001	0.8664	0.30024	0.00722578	0.262990224	0.9385	10
Silver	0.0336	0.9	0	0	75	0.004049	0.002	0.8664	0.121567176	0.01445155	0.094958906	0.338867857	10
Zinc	0.0336	0.9	0	0	79	0.123865	0.002	0.8664	4.427289	0.01445155	3.970108548	14.167625	10

(Qind) Industrial User total plant discharge flow in Million Gallons per Day (MGD) that contains a particular pollutant.
(Qpotw) POTW's average influent flow in MGD.
(Qstr) Receiving stream (upstream) 1Q10 flow in MGD.
(Cstr) Receiving stream background level in mg/l.
(Rpotw) Removal efficiency across POTW as percent.
(Ccrit) State acute water quality standard for a particular pollutant in mg/l.
(Qdom) Domestic/commercial background flow in MGD.
(Cdom) Domestic/commercial background concentration for a particular pollutant in mg/l.
(Lhw) Maximum allowable headworks pollutant loading to the POTW in pounds per day (lbs/day).
(Ldom) Domestic/commercial background loading to the POTW for a particular pollutant in pounds per day (lbs/day).
(Lind) Maximum allowable industrial loading to the POTW in pounds per day.
(Cind) Industrial allowable local limit for a given pollutant in mg/l.
(SF) Safety factor as a percent.
8.34 Unit conversion factor

$$Lhw = \frac{8.34 * (Ccrit * (Qstr + Qpotw) - (Cstr * Qstr))}{1 - Rpotw}$$

|::

TABLE C9 NOT USED

Local Limits Determination Based on Anaerobic Digester Inhibition Level

Pollutant	ENVIRONMENTAL CRITERIA AND PROCESS DATA BASE							MAXIMUM LOADING		INDUSTRIAL		
	IU Pollut. Flow (MGD) (Qind)	POTW Flow (MGD) (Qpotw)	Sludge Flow to Digester (MGD) (Qdig)	Removal Efficiency (%) (Rpotw)	Anaerobic Digester Inhibition Level (mg/l) (Ccrit)	Domestic and Commercial Conc. (mg/l) (Cdom)	Domestic and Commercial Flow (MGD) (Qdom)	Allowable Headworks (lbs/day) (Lhw)	Domestic/ Commercial (lbs/day) (Ldom)	Allowable Loading (lbs/day) (Lind)	Local Limit (mg/l) (Cind)	Safety Factor (%) (SF)
Arsenic	0.0336	0.9		45		0.001		-	0	-	-	10
Cadmium	0.0336	0.9		67		0.001		-	0	-	-	10
Chromium	0.0336	0.9		82		0.001		-	0	-	-	10
Hex. Chrom.	0.0336	0.9		82		0.001		-	0	-	-	10
Copper	0.0336	0.9		86		0.1533		-	0	-	-	10
Cyanide	0.0336	0.9		69		0.02		-	0	-	-	10
Iron	0.0336	0.9		60		0.02		-	0	-	-	10
Lead	0.0336	0.9		61		0.005		-	0	-	-	10
Mercury	0.0336	0.9		60		0.0002		-	0	-	-	10
Molybdenum	0.0336	0.9		0		0		-	0	-	-	10
Nickel	0.0336	0.9		42		0.001		-	0	-	-	10
Selenium	0.0336	0.9		50		0.001		-	0	-	-	10
Silver	0.0336	0.9		75		0.002		-	0	-	-	10
Zinc	0.0336	0.9		79		0.002		-	0	-	-	10

(Qind) Industrial User total plant discharge flow in Million Gallons per Day (MGD) that contains a particular pollutant.
(Qpotw) POTW's average influent flow in MGD.
(Qdig) Sludge flow to digester in MGD.
(Rpotw) Removal efficiency across POTW as percent.
(Ccrit) Anaerobic digester threshold inhibition level in mg/l.
(Qdom) Domestic/commercial background flow in MGD.
(Cdom) Domestic/commercial background concentration for a particular pollutant in mg/l.
(Lhw) Maximum allowable headworks pollutant loading to the POTW in pounds per day (lbs/day).
(Ldom) Domestic/commercial background loading to the POTW for a particular pollutant in pounds per day (lbs/day).
(Lind) Maximum allowable industrial loading to the POTW in pounds per day.
(Cind) Industrial allowable local limit for a given pollutant in mg/l.
(SF) Safety factor as a percent.
8.34 Unit conversion factor

$$Lhw = \frac{8.34 * Ccrit * Qdig}{Rpotw}$$