KPDES FORM 1

AI# 679

RECEIVED NOV 26 2008

RECEIVED JAN 13 2009

KENTUCKY POLLUTANT DISCHARGE ELIMINATION SYSTEM

PERMIT APPLICATION

This is an application to: (check one)

- ☐ Apply for a new permit.
- ☑ Apply for reissuance of expiring permit.
- ☐ Apply for a construction permit.
- ☐ Modify an existing permit.
  Give reason for modification under Item II.A.

A complete application consists of this form and one of the following:
Form A, Form B, Form C, Form F, or Form SC

For additional information contact:
KPDES Branch (502) 564-3410

-0-

I. FACILITY LOCATION AND CONTACT INFORMATION	AGENCY USE: 0 1 0 2 1 5 6
A. Name of business, municipality, company, etc. requesting permit: Carlisle County Sanitation District #1	
B. Facility Name and Location: Carlisle County Sanitation District #1	C. Primary Mailing Address (all facility correspondence will be sent to this address). **Include owner mailing address on a separate sheet if different.**
Facility Location Name: Carlisle County	Facility Contact Name and Title: Mr. ☑ Ms. ☐ Jerry Bowman
Facility Location Address (i.e. street, road, etc., **not PO Box**): 2286 US Hwy 51 North	Mailing Address: PO Box 219
Facility Location City, State, Zip Code: Bardwell, KY 42023	Mailing City, State, Zip Code: Bardwell, KY 42023
	Facility Contact Telephone Number: 270-628-5451

II. FACILITY DESCRIPTION

A. Provide a brief description of activities, products, etc: Aeration basin 2 - 125 gallon each = 250,000 gallons per day. Bio-lac system parkson Design w/ ultraviolet disinfection + post air at effluent

B. Standard Industrial Classification (SIC) Code and Description

Principal SIC Code & Description:	No Industrial Service	
Other SIC Codes:	4952 Sewerage Systems	

III. FACILITY LOCATION

A. Attach a U.S. Geological Survey 7 ½ minute quadrangle map for the site. (See instructions)

B. County where facility is located: Carlisle County	City where facility is located (if applicable): Bardwell
C. Body of water receiving discharge: Truman Creek at RMI 2.92	
D. Facility Site Latitude (degrees, minutes, seconds): 36° 53' 55" N	Facility Site Longitude (degrees, minutes, seconds): 89° 01' 42" W
E. Method used to obtain latitude & longitude (see instructions): Topo Zone. Com	
F. Facility Dun and Bradstreet Number (DUNS #) (if applicable): N/A	

AI 679

IV. OWNER/OPERATOR INFORMATION

A. Type of Ownership:
☐ Publicly Owned ☐ Privately Owned ☐ State Owned ☐ Both Public and Private Owned ☐ Federally owned

B. Operator Contact Information (See instructions)

Name of Treatment Plant Operator: Robin Phelps	Telephone Number: 270-628-5451
Operator Mailing Address (Street): PO Box 219	
Operator Mailing Address (City, State, Zip Code): Bardwell KY 42023	
Is the operator also the owner? Yes ☐ No ☒	*Is the operator certified? If yes, list certification class and number below. Yes ☒ No ☐
Certification Class: II	*Certification Number: 04303

V. EXISTING ENVIRONMENTAL PERMITS

Current NPDES Number: KY0102156	Issue Date of Current Permit: Oct 1, 1998	Expiration Date of Current Permit:
Number of Times Permit Reissued: None	Date of Original Permit Issuance:	Sludge Disposal Permit Number: N/A
Kentucky DOW Operational Permit #: KY0102156	Kentucky DSMRE Permit Number(s):	

Which of the following additional environmental permit/registration categories will also apply to this facility?

CATEGORY	EXISTING PERMIT WITH NO.	PERMIT NEEDED WITH PLANNED APPLICATION DATE
Air Emission Source		
Solid or Special Waste		
Hazardous Waste - Registration or Permit		

VI. DISCHARGE MONITORING REPORTS (DMRs)

KPDES permit holders are required to submit DMRs to the Division of Water on a regular schedule (as defined by the KPDES permit). Information in this section serves to specifically identify the name and telephone number of the DMR official and the DMR mailing address (if different from the primary mailing address in Section I.C).

A. DMR Official (i.e., the department, office or individual designated as responsible for submitting DMR forms to the Division of Water):	Jerry Bowman
DMR Official Telephone Number:	270-628-5451 Cell: (270) 445-0055

B. DMR Mailing Address:
- Address the Division of Water will use to mail DMR forms (if different from mailing address in Section I.C), or
- Contact address if another individual, company, laboratory, etc. completes DMRs for you; e.g., contract laboratory address.

DMR Mailing Name:	Carlisle County Sanitation District #1
DMR Mailing Address:	PO Box 219
DMR Mailing City, State, Zip Code:	Bardwell KY 42023

VII. APPLICATION FILING FEE

KPDES regulations require that a permit applicant pay an application filing fee equal to twenty percent of the permit base fee. Please examine the base and filing fees listed below and in the Form 1 instructions and enclose a check payable to "Kentucky State Treasurer" for the appropriate amount (for permit renewals, please include the KPDES permit number on the check to ensure proper crediting). Descriptions of the base fee amounts are given in the "General Instructions."

Facility Fee Category:	Filing Fee Enclosed:
Public	POTW N/A

VIII. CERTIFICATION

I certify under penalty of law that this document and all attachments were prepared under my direction or supervision in accordance with a system designed to assure that qualified personnel properly gather and evaluate the information submitted. Based on my inquiry of the person or persons who manage the system, or those persons directly responsible for gathering the information, the information submitted is, to the best of my knowledge and belief, true, accurate, and complete. I am aware that there are significant penalties for submitting false information, including the possibility of fine and imprisonment for knowing violations.

NAME AND OFFICIAL TITLE (type or print):	TELEPHONE NUMBER (area code and number):
Mr. ☑ Ms. ☐ Jerry Bowman	270-628-5451
SIGNATURE	DATE:
Jerry Bowman	11-17-08

KPDES FORM A

KENTUCKY POLLUTANT DISCHARGE ELIMINATION SYSTEM

PERMIT APPLICATION

A complete application consists of this form and Form 1.
For additional information, contact KPDES Branch (502) 564-3410.

APPLICATION OVERVIEW	AGENCY USE	0	1	0	2	1	5	6

Form A has been developed in a modular format and consists of a "Basic Application Information" packet and a "Supplemental Application Information" packet. The Basic Application Information packet is divided into two parts. All applicants must complete Parts A and C. Applicants with a design flow greater than or equal to 0.1 mgd must also complete Part B. Some applicants must also complete the Supplemental Application Information packet. The following items explain which parts of Form A you must complete.

BASIC APPLICATION INFORMATION:

A. **Basic Application Information for all Applicants.** All applicants must complete questions A.1 through A.8. A treatment works that discharges effluent to surface waters of the United States must also answer questions A.9 through A.12.

B. **Additional Application Information for Applicants with a Design Flow ≥ 0.1 mgd.** All treatment works that have design flows greater than or equal to 0.1 million gallons per day must complete questions B.1 through B.6.

C. **Certification.** All applicants must complete Part C (Certification).

SUPPLEMENTAL APPLICATION INFORMATION:

D. **Expanded Effluent Testing Data.** A treatment works that discharges effluent to surface waters of the United States and meets one or more of the following criteria must complete Part D (Expanded Effluent Testing Data):

1. Has a design flow rate greater than or equal to 1 mgd,
2. Is required to have a pretreatment program (or has one in place), or
3. Is otherwise required by the permitting authority to provide the information.

E. **Toxicity Testing Data.** A treatment works that meets one or more of the following criteria must complete Part E (Toxicity Testing Data):

1. Has a design flow rate greater than or equal to 1 mgd,
2. Is required to have a pretreatment program (or has one in place), or
3. Is otherwise required by the permitting authority to submit results of toxicity testing.

F. **Industrial User Discharges and RCRA/CERCLA Wastes.** A treatment works that accepts process wastewater from any significant industrial users (SIUs) or receives RCRA or CERCLA wastes must complete Part F (Industrial User Discharges and RCRA/CERCLA Wastes). SIUs are defined as:

1. All industrial users subject to Categorical Pretreatment Standards under 40 Code of Federal Regulations (CFR) 403.6 and 40 CFR Chapter I, Subchapter N (see instructions); and
2. Any other industrial user that:
   a. Discharges an average of 25,000 gallons per day or more of process wastewater to the treatment works (with certain exclusions); or
   b. Contributes a process wastestream that makes up 5 percent or more of the average dry weather hydraulic or organic capacity of the treatment plant; or
   c. Is designated as an SIU by the control authority.

G. **Combined Sewer Systems.** A treatment works that has a combined sewer system must complete Part G (Combined Sewer Systems).

ALL APPLICANTS MUST COMPLETE PART C (CERTIFICATION)

BASIC APPLICATION INFORMATION

PART A. BASIC APPLICATION INFORMATION FOR ALL APPLICANTS:

All treatment works must complete questions A.1 through A.8 of this Basic Application Information packet.

A.1. Facility Information.

Facility name: Carlisle County Sanitation District #1

Mailing Address: PO Box 219
Bardwell KY 42023

Contact person: Jerry Bowman

Title: Plant operator

Telephone number: 270-628-5451

Facility Address (not P.O. Box): 2286 US Hwy 51 North
Bardwell KY 42023

A.2. Applicant Information. If the applicant is different from the above, provide the following:

Applicant name: _____

Mailing Address: _____

Contact person: _____

Title: _____

Telephone number: _____

Is the applicant the owner or operator (or both) of the treatment works?

☐ Owner ☑ Operator

Indicate whether correspondence regarding this permit should be directed to the facility or the applicant.

☑ Facility ☐ Applicant

A.3. Existing Environmental Permits. Provide the permit number of any existing environmental permits that have been issued to the treatment works (include state-issued permits).

KPDES: KY0102156

UIC: _____

RCRA: _____

PSD: _____

Other: _____

Other: _____

A.4. Collection System Information. Provide information on municipalities and areas served by the facility. Provide the name and population of each entity and, if known, provide information on the type of collection system (combined vs. separate) and its ownership (municipal, private, etc.).

Name	Population Served	Type of Collection System	Ownership
City of Bardwell	815	Gravity	City of Bardwell
City of Arlington	490	Gravity	City of Arlington
Carlisle Co. School System	1000	Gravity	CC School System

Total population served _____

A.5. Indian Country.

a. Is the treatment works located in Indian Country?

☐ Yes ☑ No

b. Does the treatment works discharge to a receiving water that is either in Indian Country or that is upstream from (and eventually flows through) Indian Country?

☐ Yes ☑ No

A.6. Flow. Indicate the design flow rate of the treatment plant (i.e., the wastewater flow rate that the plant was built to handle). Also provide the average daily flow rate and maximum daily flow rate for each of the last three years. Each year's data must be based on a 12-month time period with the 12th month of "this year" occurring no more than three months prior to this application submittal.

a. Design flow rate 0.250 mgd

	Two Years Ago	Last Year	This Year	
b. Annual average daily flow rate			0.126	mgd
c. Maximum daily flow rate			0.254	mgd

A.7. Collection System. Indicate the type(s) of collection system(s) used by the treatment plant. Check all that apply. Also estimate the percent contribution (by miles) of each.

☐	Separate sanitary sewer	%
☑	Combined storm and sanitary sewer	15 %

A.8. Discharges and Other Disposal Methods.

a. Does the treatment works discharge effluent to waters of the U.S.? ☑ Yes ☐ No

If yes, list how many of each of the following types of discharge points the treatment works uses:

i. Discharges of treated effluent 1

ii. Discharges of untreated or partially treated effluent Ø

iii. Combined sewer overflow points Ø

iv. Constructed emergency overflows (prior to the headworks) Ø

v. Other _____ Ø

b. Does the treatment works discharge effluent to basins, ponds, or other surface impoundments that do not have outlets for discharge to waters of the U.S.? ☐ Yes ☑ No

If yes, provide the following for each surface impoundment:

Location: _____

Annual average daily volume discharged to surface impoundment(s) _____ mgd

Is discharge ☐ continuous or ☐ intermittent?

c. Does the treatment works land-apply treated wastewater? ☐ Yes ☑ No

If yes, provide the following for each land application site:

Location: _____

Number of acres: _____

Annual average daily volume applied to site: _____ mgd

Is land application ☐ continuous or ☐ intermittent?

d. Does the treatment works discharge or transport treated or untreated wastewater to another treatment works? ☐ Yes ☑ No

If yes, describe the mean(s) by which the wastewater from the treatment works is discharged or transported to the other treatment works (e.g., tank truck, pipe).

_____

If transport is by a party other than the applicant, provide:

Transporter name: _____

Mailing Address: _____

_____

Contact person: _____

Title: _____

Telephone number: _____

For each treatment works that receives this discharge, provide the following:

Name: _____

Mailing Address: _____

_____

Contact person: _____

Title: _____

Telephone number: _____

If known, provide the KPDES permit number of the treatment works that receives this discharge. _____

Provide the average daily flow rate from the treatment works into the receiving facility. _____ mgd

e. Does the treatment works discharge or dispose of its wastewater in a manner not included in A.8.a through A.8.d above (e.g., underground percolation, well injection)? ☐ Yes ☑ No

If yes, provide the following for each disposal method:

Description of method (including location and size of site(s) if applicable):

_____

Annual daily volume disposed of by this method: _____

Is disposal through this method ☐ continuous or ☐ intermittent?

WASTEWATER DISCHARGES:

If you answered "yes" to question A.8.a, complete questions A.9 through A.12 **once for each outfall** (including bypass points) through which effluent is discharged. Do not include information on combined sewer overflows in this section. **If you answered "no" to question A.8.a**, go to Part B, "Additional Application Information for Applicants with a Design Flow Greater than or Equal to 0.1 mgd."

A.9. Description of Outfall.

a. Outfall number: 1

b. Location

Bardwell (City or town, if applicable) — 42023 (Zip Code)

Carlisle (County) — KY (State)

36° 52' 49" N (Latitude) — 89° 01' 00" W (Longitude)

c. Distance from shore (if applicable): N/A ft.

d. Depth below surface (if applicable): N/A ft.

e. Average daily flow rate: 0.126 mgd

f. Does this outfall have either an intermittent or a periodic discharge? ☐ Yes ☑ No (go to A.9.g.)

If yes, provide the following information:

Number of times per year discharge occurs: _____

Average duration of each discharge: _____

Average flow per discharge: _____ mgd

Months in which discharge occurs: _____

g. Is outfall equipped with a diffuser? ☐ Yes ☐ No

A.10. Description of Receiving Waters.

a. Name of receiving water: Truman Creek

b. Name of watershed (if known): _____

United States Soil Conservation Service 14-digit watershed code (if known): _____

c. Name of State Management/River Basin (if known): _____

United States Geological Survey 8-digit hydrologic cataloging unit code (if known): _____

d. Critical low flow of receiving stream (if applicable):
acute _____ cfs chronic _____ cfs

e. Total hardness of receiving stream at critical low flow (if applicable): _____ mg/l of $CaCO_3$

A.11. Description of Treatment.

a. What levels of treatment are provided? Check all that apply.

☑ Primary ☐ Secondary

☐ Advanced ☐ Other. Describe: _____

b. Indicate the following removal rates (as applicable):

Design BOD_5 removal or Design $CBOD_5$ removal	85	%
Design SS removal	85	%
Design P removal	N/A	%
Design N removal	85	%
Other _____		%

c. What type of disinfection is used for the effluent from this outfall? If disinfection varies by season, please describe.

Ultra-violet disinfection.

If disinfection is by chlorination, is dechlorination used for this outfall? ☐ Yes ☑ No

d. Does the treatment plant have post aeration? ☑ Yes ☐ No

A.12. Effluent Testing Information. All Applicants that discharge to waters of the US must provide effluent testing data for the following parameters. Provide the indicated effluent testing required by the permitting authority for each outfall through which effluent is discharged. Do not include information on combined sewer overflows in this section. All information reported must be based on data collected through analysis conducted using 40 CFR Part 136 methods. In addition, this data must comply with QA/QC requirements of 40 CFR Part 136 and other appropriate QA/QC requirements for standard methods for analytes not addressed by 40 CFR Part 136. At a minimum, effluent testing data must be based on at least three samples and must be no more than four and one-half years apart.

Outfall number: 1

PARAMETER	MAXIMUM DAILY VALUE		AVERAGE DAILY VALUE		
	Value	Units	Value	Units	Number of Samples
pH (Minimum)	6.78	s.u.			
pH (Maximum)	7.80	s.u.			
Flow Rate	0.126	mgd			
Temperature (Winter)					
Temperature (Summer)					

* For pH please report a minimum and a maximum daily value

POLLUTANT		MAXIMUM DAILY DISCHARGE		AVERAGE DAILY DISCHARGE			ANALYTICAL METHOD	ML / MDL
		Conc.	Units	Conc.	Units	Number of Samples		
CONVENTIONAL AND NONCONVENTIONAL COMPOUNDS.								
BIOCHEMICAL OXYGEN	BOD-5	219.85	27.415	4.43	114.23	12	Composite	
DEMAND (Report one)	CBOD-5							
FECAL COLIFORM		N/A	187.75	<10	>600	12	Grab	
TOTAL SUSPENDED SOLIDS (TSS)		117.94	25.92	4.82	102.95	12	Composite	

END OF PART A.

REFER TO THE APPLICATION OVERVIEW TO DETERMINE WHICH OTHER PARTS OF FORM A YOU MUST COMPLETE

BASIC APPLICATION INFORMATION

PART B. ADDITIONAL APPLICATION INFORMATION FOR APPLICANTS WITH A DESIGN FLOW GREATER THAN OR EQUAL TO 0.1 MGD (100,000 gallons per day).

All applicants with a design flow rate ≥ 0.1 mgd must answer questions B.1 through B.6. All others go to Part C (Certification).

B.1. Inflow and Infiltration. Estimate the average number of gallons per day that flow into the treatment works from inflow and/or infiltration.

500 gpd

Briefly explain any steps underway or planned to minimize inflow and infiltration.

City of Bardwell + City of Arlington have both been undergoing Sewer line rehab + relining projects.

B.2. Topographic Map. Attach to this application a topographic map of the area extending at least one mile beyond facility property boundaries. This map must show the outline of the facility and the following information. (You may submit more than one map if one map does not show the entire area.)

a. The area surrounding the treatment plant, including all unit processes.

b. The major pipes or other structures through which wastewater enters the treatment works and the pipes or other structures through which treated wastewater is discharged from the treatment plant. Include outfalls from bypass piping, if applicable.

c. Each well where wastewater from the treatment plant is injected underground.

d. Wells, springs, other surface water bodies, and drinking water wells that are: 1) within 1/4 mile of the property boundaries of the treatment works, and 2) listed in public record or otherwise known to the applicant.

e. Any areas where the sewage sludge produced by the treatment works is stored, treated, or disposed.

f. If the treatment works receives waste that is classified as hazardous under the Resource Conservation and Recovery Act (RCRA) by truck, rail, or special pipe, show on the map where that hazardous waste enters the treatment works and where it is treated, stored, and/or disposed.

B.3. Process Flow Diagram or Schematic. Provide a diagram showing the processes of the treatment plant, including all bypass piping and all backup power sources or redundancy in the system. Also provide a water balance showing all treatment units, including disinfection (e.g, chlorination and dechlorination). The water balance must show daily average flow rates at influent and discharge points and approximate daily flow rates between treatment units. Include a brief narrative description of the diagram.

B.4. Operation/Maintenance Performed by Contractor(s).

Are any operational or maintenance aspects (related to wastewater treatment and effluent quality) of the treatment works the responsibility of a contractor? ☐ Yes ☑ No

If yes, list the name, address, telephone number, and status of each contractor and describe the contractor's responsibilities (attach additional pages if necessary).

Name: _____

Mailing Address: _____

_____

Telephone Number: _____

Responsibilities of Contractor: _____

B.5. Scheduled Improvements and Schedules of Implementation. Provide information on any uncompleted implementation schedule or uncompleted plans for improvements that will affect the wastewater treatment, effluent quality, or design capacity of the treatment works. If the treatment works has several different implementation schedules or is planning several improvements, submit separate responses to question B.5 for each. (If none, go to question B.6.)

a. List the outfall number (assigned in question A.9) for each outfall that is covered by this implementation schedule.

~~1~~ 0102156

b. Indicate whether the planned improvements or implementation schedule are required by local, State, or Federal agencies.

☐ Yes ☑ No

AI 679

c If the answer to B.5.b is "Yes," briefly describe, including new maximum daily inflow rate (if applicable).

_____

d. Provide dates imposed by any compliance schedule or any actual dates of completion for the implementation steps listed below, as applicable. For improvements planned independently of local, State, or Federal agencies, indicate planned or actual completion dates, as applicable. Indicate dates as accurately as possible.

Implementation Stage	Schedule MM / DD / YYYY	Actual Completion MM / DD / YYYY
– Begin construction	_____	_____
– End construction	_____	_____
– Begin discharge	_____	_____
– Attain operational level	_____	_____

e. Have appropriate permits/clearances concerning other Federal/State requirements been obtained? ☐ Yes ☐ No

Describe briefly: _____

B.6. EFFLUENT TESTING DATA (GREATER THAN 0.1 MGD ONLY).

Applicants that discharge to waters of the US must provide effluent testing data for the following parameters. Provide the indicated effluent testing required by the permitting authority for each outfall through which effluent is discharged. Do not include information on combined sewer overflows in this section. All information reported must be based on data collected through analysis conducted using 40 CFR Part 136 methods. In addition, this data must comply with QA/QC requirements of 40 CFR Part 136 and other appropriate QA/QC requirements for standard methods for analytes not addressed by 40 CFR Part 136. At a minimum, effluent testing data must be based on at least three pollutant scans and must be no more than four and one-half years old.

Outfall Number: _____

POLLUTANT	MAXIMUM DAILY DISCHARGE		AVERAGE DAILY DISCHARGE			ANALYTICAL METHOD	ML / MDL
	Conc.	Units	Conc.	Units	Number of Samples		
CONVENTIONAL AND NONCONVENTIONAL COMPOUNDS.							
AMMONIA (as N)	21.41	mg/L	14.34		12	Composite	
CHLORINE (TOTAL RESIDUAL, TRC)	Not used reuse ultraviolet						
DISSOLVED OXYGEN	6.125		10.2		12	Grab	
TOTAL KJELDAHL NITROGEN (TKN)	3.36	mg/L			3	EPA 351.2	
NITRATE PLUS NITRITE NITROGEN	13.5	mg/L			3	EPA 300	
OIL and GREASE	2	mg/L	2		3	EPA 1664A	
PHOSPHORUS (Total)	1.60 D	mg/L			3	SM4500 PE	
TOTAL DISSOLVED SOLIDS (TDS)	364	mg/L	152	mg/L	3	SM2540C	
OTHER							

END OF PART B.

REFER TO THE APPLICATION OVERVIEW TO DETERMINE WHICH OTHER PARTS OF FORM A YOU MUST COMPLETE

BASIC APPLICATION INFORMATION

PART C. CERTIFICATION

All applicants must complete the Certification Section. Refer to instructions to determine who is an officer for the purposes of this certification. All applicants must complete all applicable sections of Form A, as explained in the Application Overview. Indicate below which parts of Form A you have completed and are submitting. By signing this certification statement, applicants confirm that they have reviewed Form A and have completed all sections that apply to the facility for which this application is submitted.

Indicate which parts of Form A you have completed and are submitting:

☑ Basic Application Information packet

Supplemental Application Information packet:

☐ Part D (Expanded Effluent Testing Data)

☐ Part E (Toxicity Testing: Biomonitoring Data)

☐ Part F (Industrial User Discharges and RCRA/CERCLA Wastes)

☐ Part G (Combined Sewer Systems)

ALL APPLICANTS MUST COMPLETE THE FOLLOWING CERTIFICATION.

I certify under penalty of law that this document and all attachments were prepared under my direction or supervision in accordance with a system designed to assure that qualified personnel properly gather and evaluate the information submitted. Based on my inquiry of the person or persons who manage the system or those persons directly responsible for gathering the information, the information is, to the best of my knowledge and belief, true, accurate, and complete. I am aware that there are significant penalties for submitting false information, including the possibility of fine and imprisonment for knowing violations.

Name and official title: Jerry Bowman Plant Operator

Signature: Jerry Bowman

Telephone number: 270-628-5451

Date signed: 11-17-08

Upon request of the permitting authority, you must submit any other information necessary to assess wastewater treatment practices at the treatment works or identify appropriate permitting requirements.

SEND COMPLETED FORMS TO:

Division of Water, KPDES Branch
Inventory & Data Management Section
Frankfort Office Park
14 Reilly Road
Frankfort, Kentucky 40601

For additional information call: (502) 564-2225, extension 465.

200 Fair Oaks Lane

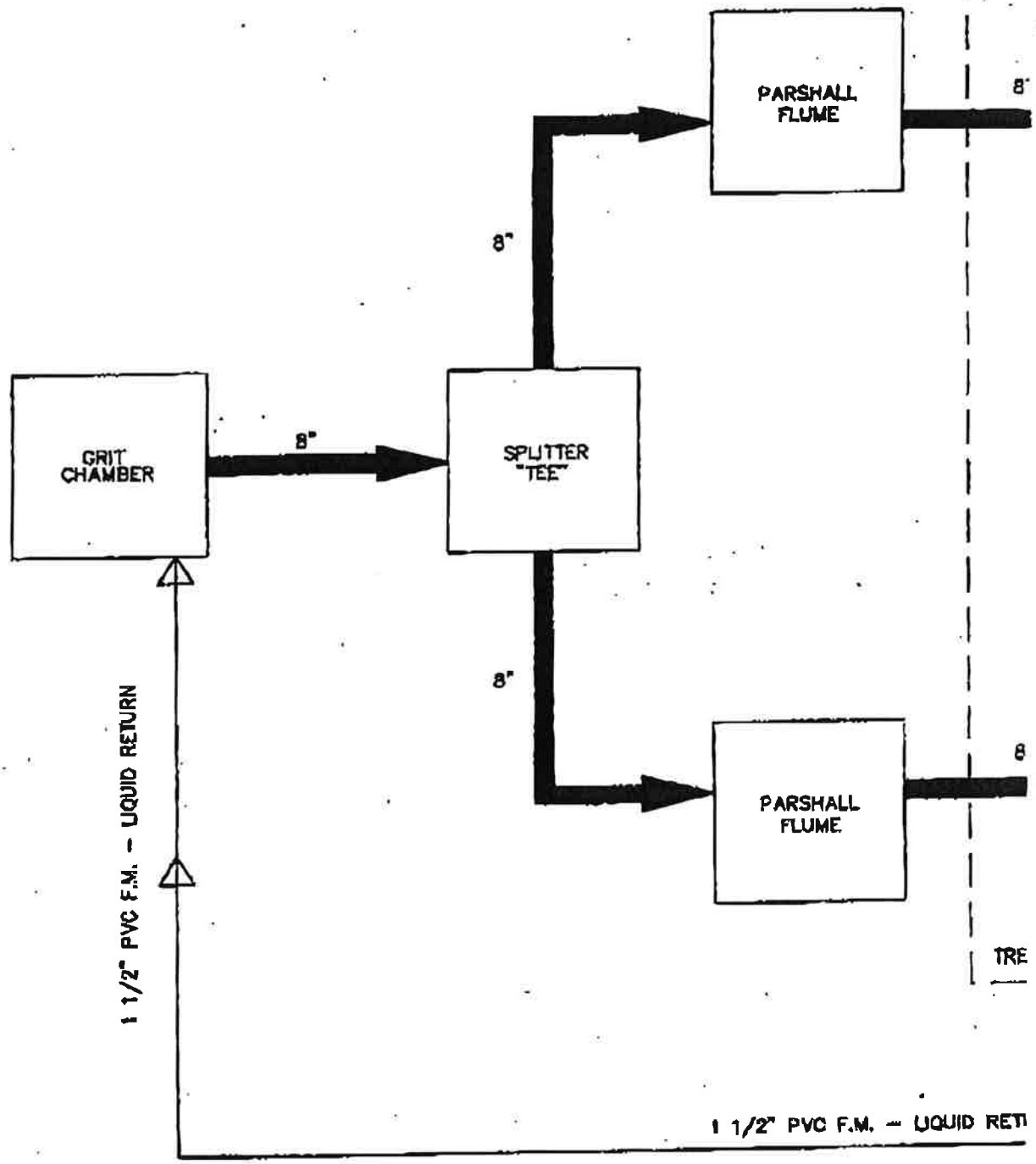
PARSHALL FLUME
8"
8"
GRIT CHAMBER
8"
SPLITTER "TEE"
8"
PARSHALL FLUME
8
TRE
1 1/2" PVC F.M. – LIQUID RETURN
1 1/2" PVC F.M. – LIQUID RETI

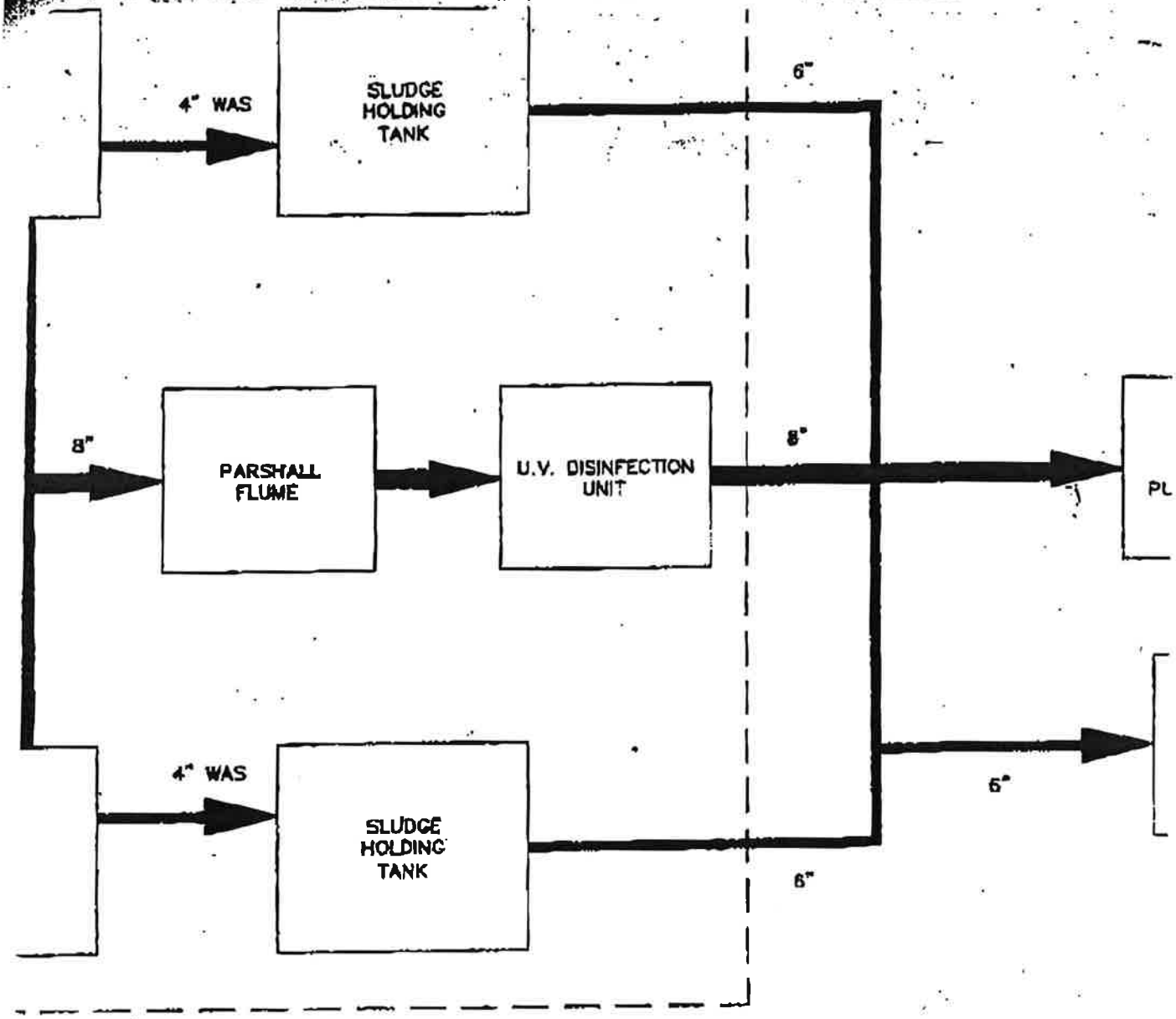

1 1/2" PVC F.M. – LIQUID RETURN

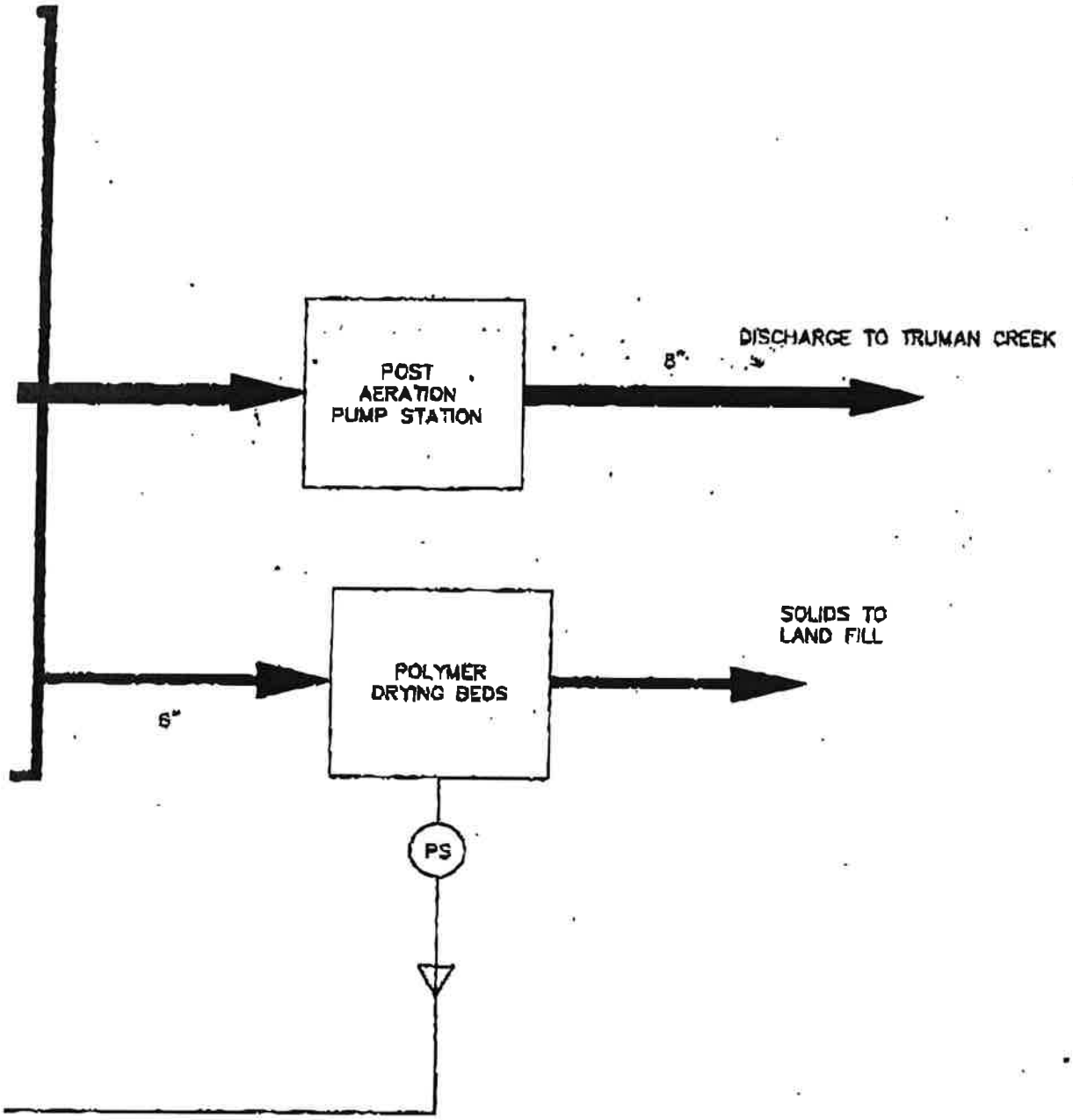
POST
AERATION
PUMP STATION
8"
DISCHARGE TO TRUMAN CREEK
POLYMER
DRYING BEDS
SOLIDS TO
LAND FILL
6"
PS

TopoZone.com

Target is 36° 53' 55"N, 89° 01' 42"W - **WICKLIFFE** quad [Quad Info]

1:25,000

TopoZone.com

Target is 36° 52' 49"N, 89° 01' 00"W - **WICKLIFFE** quad [Quad Info]

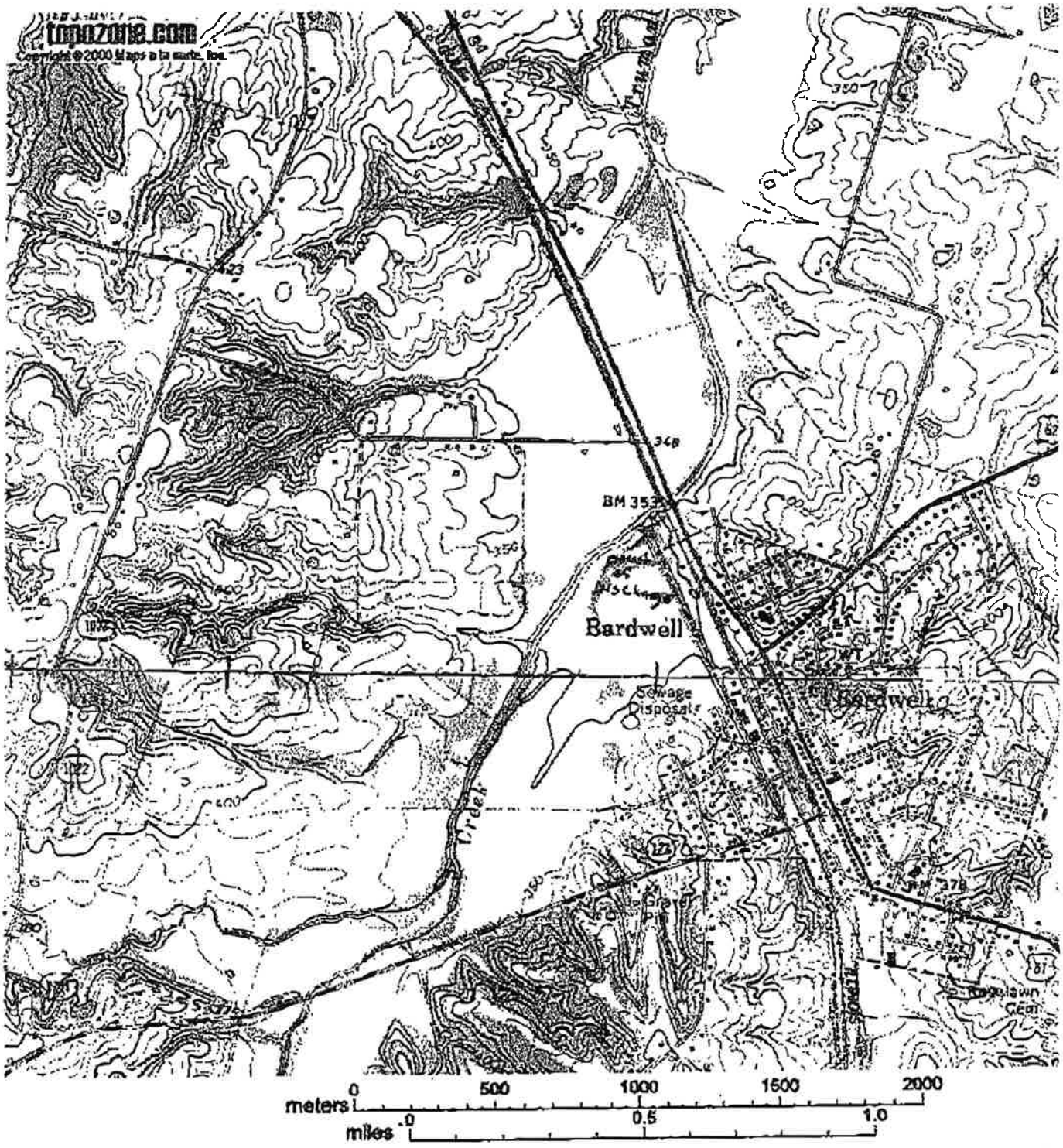

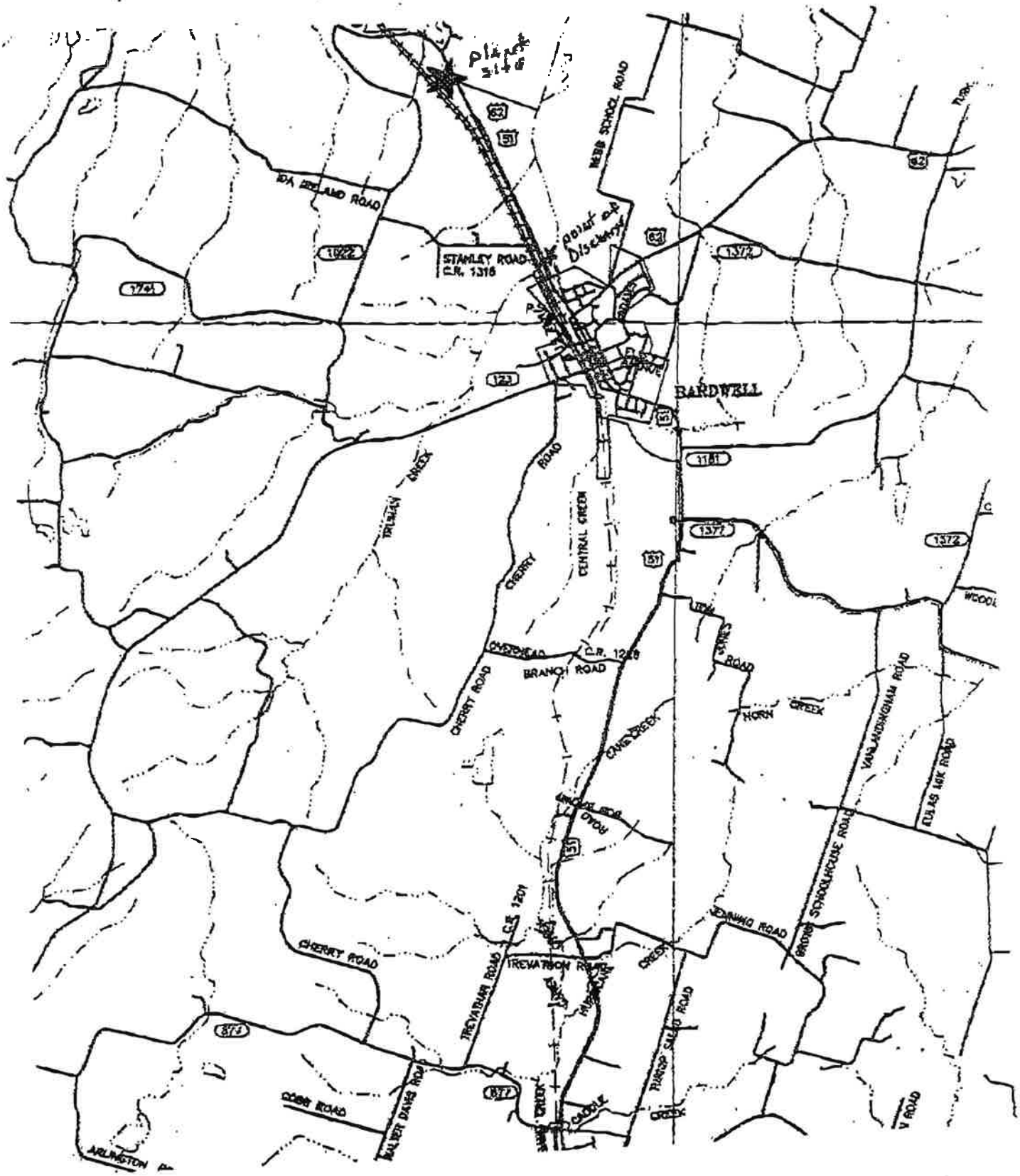
plant site
point of Discharge
IDA IRELAND ROAD
STANLEY ROAD
C.R. 1316
WEBB SCHOOL ROAD
BARDWELL
TRUMAN CREEK
CHERRY ROAD
CENTRAL CREEK
OVERHEAD
C.R. 1228
BRANCH ROAD
CANE CREEK
HORN CREEK
VANLANDINGHAM ROAD
EULAS MIX ROAD
GROVE SCHOOLHOUSE ROAD
JENNING ROAD
TREVATHAN ROAD
C.R. 1201
TREVATHAN ROAD
TURNIP SALAD ROAD
COBB ROAD
WALTER DAVIS ROAD
ARLINGTON
CADDLE CREEK
1741
1922
1372
123
1181
1377
1372
873
877
62
51

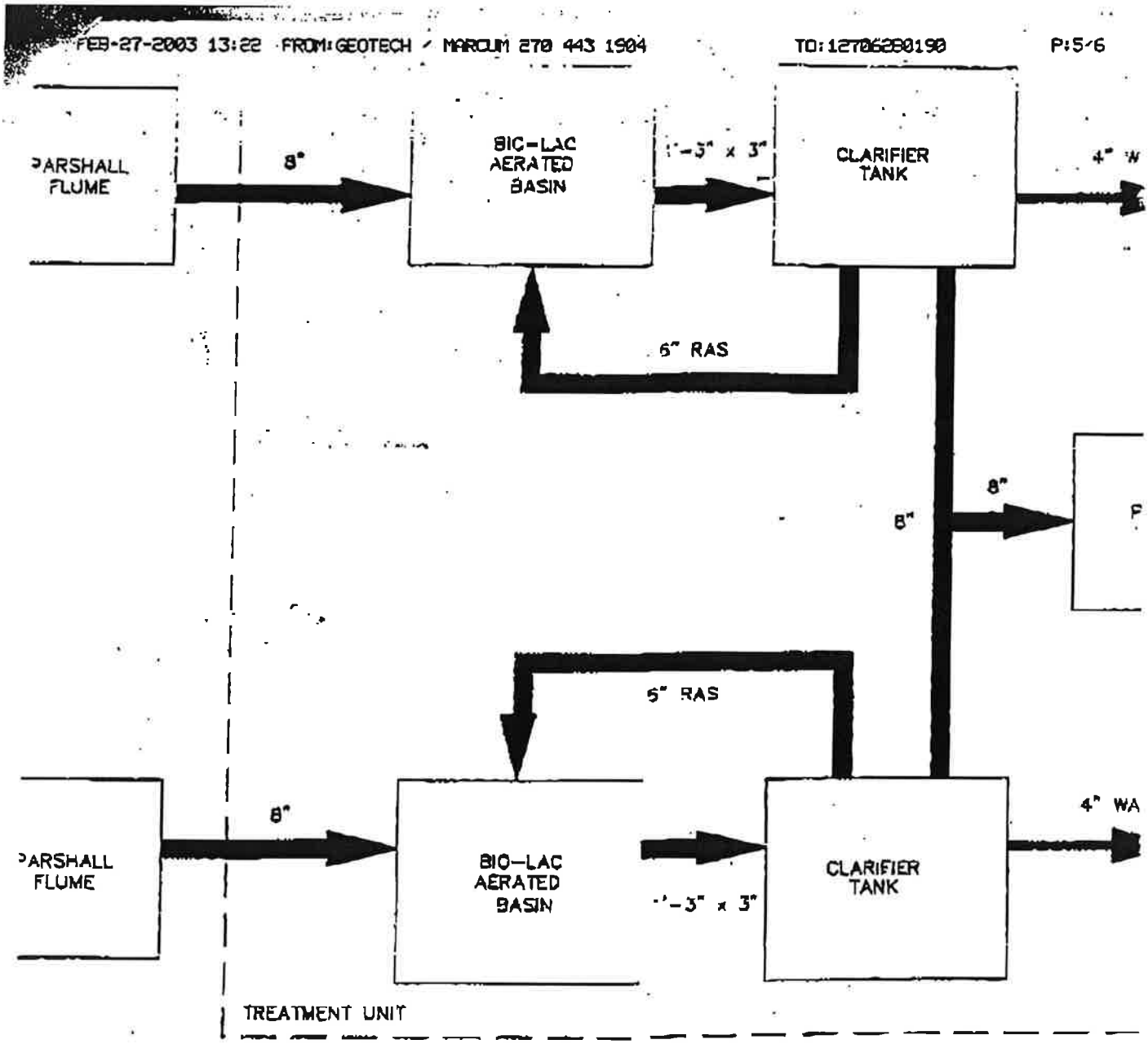

" PVC F.M. — LIQUID RETURN