SCHULTZ PARK IMPROVEMENTS AND TRANSIENT BOAT DOCK

CITY OF PADUCAH

Sheet Index	
Sheet Number	Sheet Title
T-1.1	TITLE
C-1.1	EXISTING CONDITIONS
C-2.1	SITE DEMOLITION
C-3.1	GRADING PLAN - CUT & FILL
C-3.2	GRADING PLAN - OVERALL
C-3.3	GRADING PLAN - NORTH
C-4.1	LAYOUT PLAN - OVERALL
C-4.2	LAYOUT PLAN - NORTH
C-4.3	LAYOUT PLAN - CENTRAL
C-4.4	LAYOUT PLAN - ENLARGEMENTS
C-4.5	DETAIL WALKS PATTERNING ENLARGEMENT PLANS
C-4.6	ROAD PLAN & PROFILE
C-5.1	MATERIALS PLAN
C-6.1	ELECTRICAL PLAN
C-7.1	UTILITY PLAN
C-8.1	SITE DETAILS
C-8.2	UPPER STAIR DETAILS
C-8.3	UPPER STAIR DETAILS
C-8.4	LOWER STAIR DETAILS
C-8.5	LOWER STAIR DETAILS
C-8.6	NORTHWEST STAIR DETAILS
C-8.7	DETAILS
C-8.8	DETAILS
C-9.1	STABILIZATION PLAN
L-1.1	PLANTING PLAN
D-1.1	TRANSIENT DOCK
D-2.1	TRANSIENT DOCK DETAILS
D-3.1	TRANSIENT DOCK DETAILS
D-4.1	FUEL DOCK & FLOATING BUILDING
D-5.1	FUEL DOCK & FLOATING BUILDING DETAILS
G-1.1	GANGWAY PLAN
G-1.2	GANGWAY ELEVATION AND DETAILS
G-1.3	GANGWAY PLATFORM DETAILS
G-1.4	GANGWAY PLATFORM DETAILS
G-1.5	GANGWAY PLATFORM DETAILS
G-1.6	GANGWAY PLATFORM DETAILS

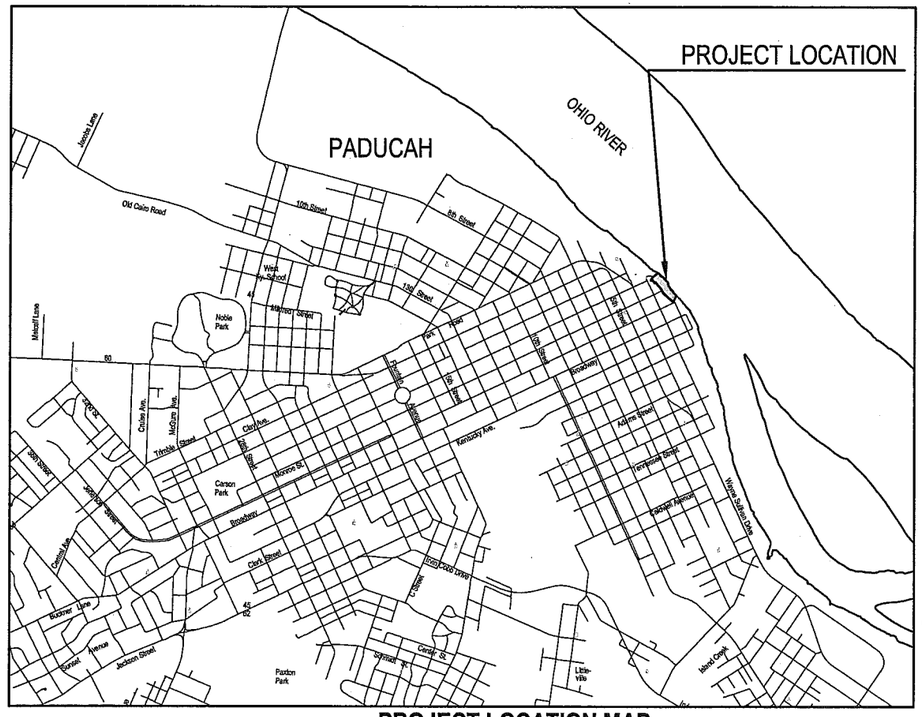

PROJECT LOCATION MAP

BOARD OF COMMISSIONERS:

WILLIAM F. PAXTON III - MAYOR

GAYLE KALER - CITY COMMISSIONER
GERALD WATKINS - CITY COMMISSIONER
CAROL GAULT - CITY COMMISSIONER
RICHARD ABRAHAM - CITY COMMISSIONER

JIM ZUMWALT - CITY MANAGER

RICK MURPHY, P.E. - CITY ENGINEER

Owner:

City of Paducah, Kentucky
300 South 5th Street
P.O. Box 2267
Paducah, Kentucky 42002-2267

Date Issued for Review:

September 30, 2009

Designer and Engineer:

JJR landscape architecture planning urban design civil engineering environmental science

JJR, LLC
625 WILLIAMSON STREET
MADISON, WI 53703
608.251.1177 T
608.251.6147 F
www.jjr-us.com

Subconsultant:

Florence & Hutcheson, Inc. Consulting Engineers

Florence & Hutcheson, Inc.
P.O. Box 7267
Paducah, Kentucky 42002

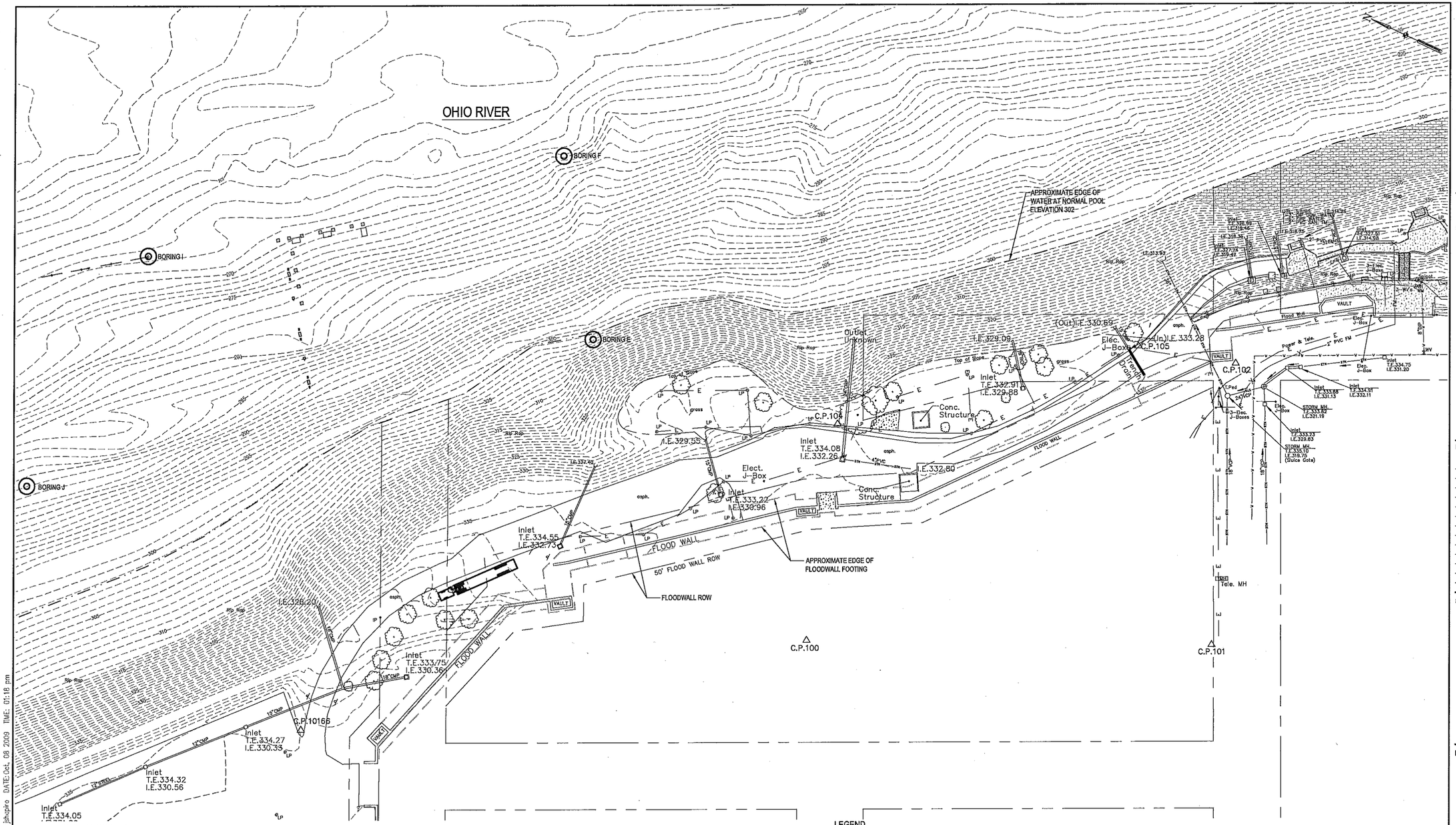

UTILITY OWNERS

TELEPHONE
BELL SOUTH 810
KENTUCKY AVE.
PADUCAH, KY 42003
(270) 444-5047

WATER
PADUCAH WATER 401
WASHINGTON STREET
PADUCAH, KY. 42003
(270) 442-2746

ELECTRIC
JACKSON PURCHASE ENERGY CORP.
2900 IRVIN COBB DRIVE
PADUCAH, KY
(270) 442-7321

PADUCAH POWER SYSTEM
1500 BROADWAY
PADUCAH, KY 42003
(270) 575-4000

SANITARY SEWER
PADUCAH McCRACKEN JOINT SEWER AGENCY
621 NORTHVIEW STREET
PADUCAH, KY. 42001
(270) 575-0056

CABLE
COMCAST CABLEVISION
800 BROADWAY
PADUCAH, KY. 42003
(270) 442-6382

GAS
ATMOS ENERGY CORP.
P.O. BOX 1079
PADUCAH, KY 42002
(270) 443-7235

STORM SEWER
CITY OF PADUCAH
ENGINEERING DEPARTMENT
300 SOUTH 5th St.
PADUCAH, KY 42003
(270) 444-8511

NOTES:
1. LAND BASED TOPOGRAPHIC MAP WAS DEVELOPED BY FLORENCE & HUTCHESON OF PADUCAH, KY (MAY 2007).
2. THE DIRECTION AND BASIS OF NORTH SHOWN ON THIS SURVEY ARE BASED ON THE PADUCAH G.I.S. MONUMENT SYSTEM WHICH IS THE KENTUCKY STATE PLANE GRID SYSTEM SOUTH ZONE N.A.D. 83 (GEOID99). THE SYSTEM USED FOR THIS SURVEY IS THE BASIS OF THE PADUCAH G.I.S. SYSTEM 2nd ITERATION.
3. THE SOURCE OF VERTICAL DATUM FOR THIS SURVEY IS NGS MONUMENT R-129 FIRST ORDER CLASS 1-(NAVD 88).
4. BATHYMETRIC SURVEY WAS PERFORMED BY JJR, LLC ON APRIL 17, 2007.
5. LOCATIONS OF UTILITIES SHOWN ON THESE DRAWINGS ARE APPROXIMATE AND MAY NOT INCLUDE ALL UTILITIES ON SITE. CONTRACTOR IS RESPONSIBLE FOR LOCATING ALL UTILITIES PRIOR TO EXCAVATION.
6. CONTACT 'BEFORE-U-DIG' AT 1-800-752-6007 A MINIMUM OF TWO BUSINESS DAYS PRIOR TO EXCAVATION FOR LOCATION OF UNDERGROUND UTILITIES. COORDINATE EXCAVATION WITH ALL UTILITY OWNERS, INCLUDING THOSE WHO DO NOT SUBSCRIBE TO B.U.D. UTILITY CONTACT INFORMATION IS LISTED ON THE LEFT SIDE OF THIS SHEET.
7. PROPERTY LINES AND RIGHT OF WAY LINES HAVE BEEN APPROXIMATED WITH EXISTING PARCEL MAPS, LAST DEEDS OF RECORD, AND PROPERTY IRONS FOUND.

LEGEND

C.P.100	CONTROL POINT
—V—V—V—	WATER LINE
—E—	UNDERGROUND ELECTRIC
—STM—STM—	STORM
	CONCRETE
	COBBLE STONE
	TREE
WV	GATE VALVE
	WATER METER
	SIGN
	INDEX CONTOUR
	INTERMEDIATE CONTOUR
	RIGHT-OF-WAY
	SOIL BORING

CONTROL POINTS

POINT #	NORTHING	EASTING	DESCRIPTION
CP - 10000	1928931.862	809819.955	SPIKE NAIL & SHINER
CP - 10166	1928826.138	810022.583	SPIKE NAIL
CP - 100	1928410.176	810313.800	MAG NAIL & SHINER
CP - 101	1928043.632	810478.483	MAG NAIL & SHINER
CP - 102	1928140.025	810739.766	MAG NAIL & SHINER
CP - 103	1927750.541	810946.850	MAG NAIL & SHINER
CP - 104	1928472.780	810519.990	SPIKE NAIL & SHINER
CP - 105	1928234.199	810714.920	SPIKE NAIL & SHINER
CP - 106	1927767.641	810999.453	SPIKE NAIL & SHINER
CP - 107	1927391.975	811176.038	SPIKE NAIL & SHINER
CP - 200	1927416.099	811103.990	MAG NAIL & B. CAP

BENCHMARKS

BM #900: N. MOST BOLT ON A DARLING FIRE HYDRANT IN THE S.W. CORNER OF BROADWAY & S. WATER STREET INTERSECTION. ELEV. = 338.68

BM #923: CITY OF PADUCAH RIVER GUAGE BENCHMARK ESTABLISHED 1957 REFERENCE CITY OF PADUACH ENGINEERS FIELD RECORDS BOOK 211, PAGE 6, 7, 8, & 124

SCHULTZ PARK AND TRANSIENT DOCK

Owner:
CITY OF PADUCAH

JJR
landscape architecture
planning
urban design
civil engineering
environmental science

JJR, LLC
625 WILLIAMSON STREET,
MADISON, WISCONSIN 53703
608.251.1177 T
608.251.6147 F
www.jjr-us.com

Florence & Hutcheson, Inc.
CONSULTING ENGINEERS

ISSUED FOR	REV	DATE

SEALS AND SIGNATURES

NOT FOR CONSTRUCTION

KEY PLAN

DRAWING TITLE
EXISTING CONDITIONS

0 25' 50' 100'
SCALE IN FEET

SCALE 24757.200

PROJECT NUMBER

DRAWING NUMBER C-1.1

FILE:P:\24757\200\CAD\sheet\24757-200-SH-EX-COND.dwg USER: jshapiro DATE: Oct. 08 2009 TIME: 01:18 pm

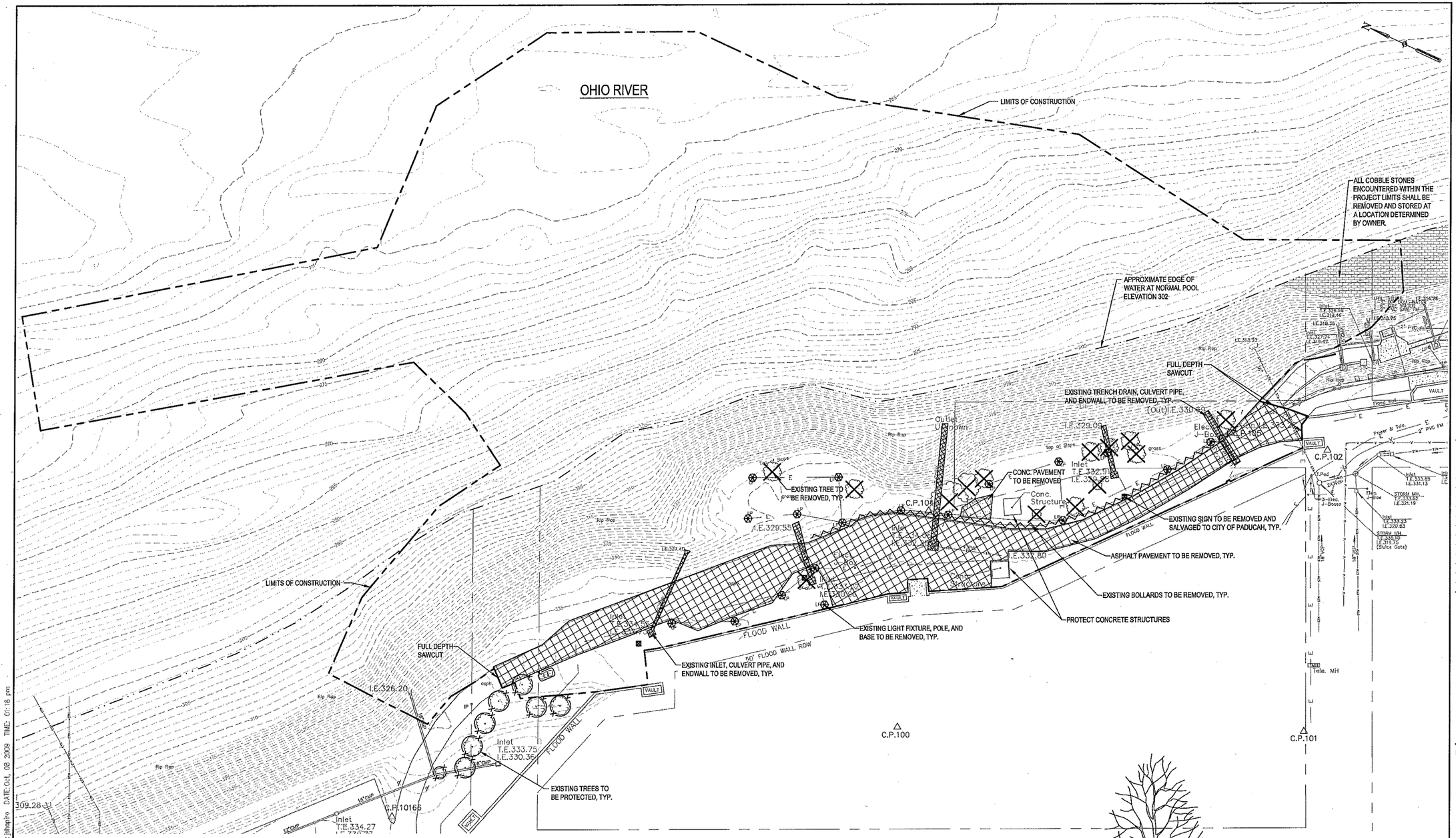

NOTES:

1. SITE DEMOLITION SHALL NOT OCCUR UNTIL LAND MASS IS CREATED.
2. REMOVE AND SALVAGE ALL TRASH BIN RECEPTACLES, BENCHES, AND PICNIC TABLES. TURN OVER ALL ITEMS TO THE CITY OF PADUCAH FOR REUSE.
3. EXISTING LIGHT FIXTURES, STANDARDS, AND LIGHT BASES ARE TO BE REMOVED AND SALVAGED. COORDINATE WITH THE CITY OF PADUCAH REGARDING THE REMOVAL OF THESE ITEMS.
4. REMOVE AND DISPOSE OF ALL CONCRETE BASES FOR LIGHT POLES.
5. BEFORE EXCAVATION, APPROPRIATE UTILITY COMPANIES SHOULD BE CONTACTED. CONTACT "BEFORE-U-DIG" AT 1-800-752-6007 A MINIMUM OF TWO BUSINESS DAYS PRIOR TO EXCAVATION FOR LOCATION OF UNDERGROUND UTILITIES. COORDINATE EXCAVATION WITH ALL UTILITY OWNERS, INCLUDING THOSE WHO DO NOT SUBSCRIBE TO B.U.D. UTILITY CONTACT INFORMATION IS LISTED ON SHEET C-1.1.
6. ACCESS ROUTES SHALL BE PRE-APPROVED BY CITY OF PADUCAH AND EMERGENCY SERVICES.
7. VEGETATION AND DEBRIS SHALL BE REMOVED PRIOR TO FILLING OPERATION.
8. SALVAGED COBBLES SHALL BE DELIVERED TO CITY.
9. EXISTING STORMWATER PIPES THAT WILL BE OVER 5 FT. BELOW FUTURE GRADE MAY BE ABANDONED IN PLACE AS LONG AS CONCRETE COLLARS ARE SECURELY SEALED AND PLUGS ARE PLACED OVER EXPOSED UPHILL SIDE.
10. SEE EXISTING CONDITIONS PLAN FOR LEGEND OF EXISTING CONDITIONS.

LEGEND

- EXISTING TREE TO BE REMOVED
- EXISTING TREE TO BE PROTECTED
- EXISTING LIGHT FIXTURE, POLE, AND BASE TO BE REMOVED
- EXISTING SIGN TO BE REMOVED AND SALVAGED TO CITY OF PADUCAH
- PAVEMENT AND BASE COURSE TO BE REMOVED
- EXISTING FEATURE TO BE REMOVED
- EXISTING LINE OF BOLLARDS TO BE REMOVED
- NORMAL POOL ELEVATION
- LIMITS OF CONSTRUCTION

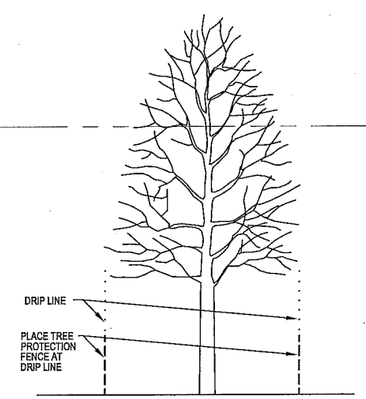

1 / C-2.1 TREE PROTECTION SECTION

SCHULTZ PARK AND TRANSIENT DOCK

Owner:

CITY OF PADUCAH

JJR
landscape architecture
planning
urban design
civil engineering
environmental science

JJR, LLC
625 WILLIAMSON STREET,
MADISON, WISCONSIN 53703
608.251.1177 T
608.251.6147 F
www.jjr-us.com

ISSUED FOR	REV	DATE

SEALS AND SIGNATURES

NOT FOR CONSTRUCTION

KEY PLAN

DRAWING TITLE

SITE DEMOLITION

0 25' 50' 100'
SCALE IN FEET

SCALE 24757.200

PROJECT NUMBER

C-2.1

DRAWING NUMBER

FILE:P:\24757\200\CAD\sheet\24757-200-SH-DEMO.dwg USER: jshapiro DATE:Oct. 08 2009 TIME: 01:18 pm

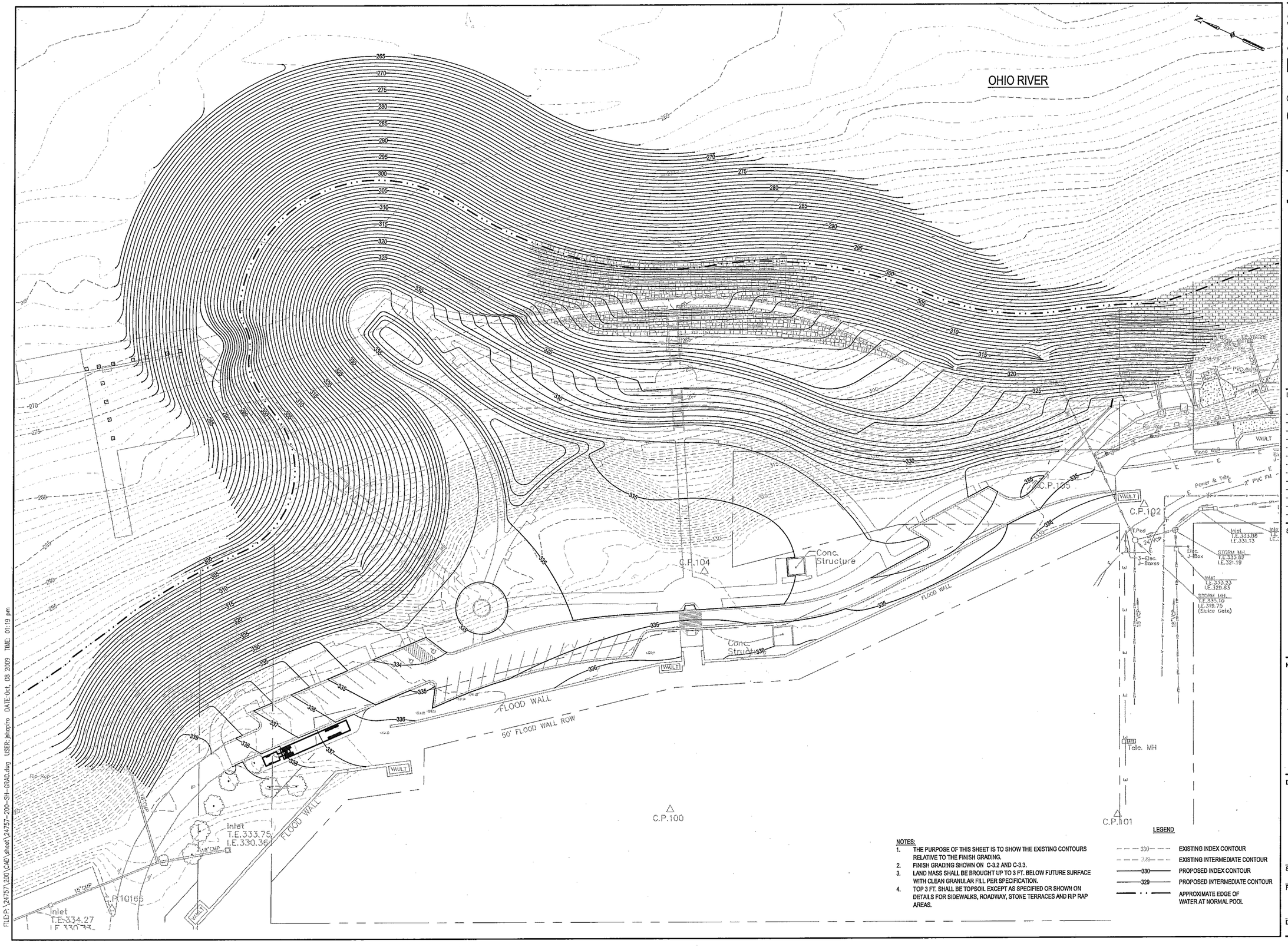

NOTES:

1. THE PURPOSE OF THIS SHEET IS TO SHOW THE EXISTING CONTOURS RELATIVE TO THE FINISH GRADING.
2. FINISH GRADING SHOWN ON C-3.2 AND C-3.3.
3. LAND MASS SHALL BE BROUGHT UP TO 3 FT. BELOW FUTURE SURFACE WITH CLEAN GRANULAR FILL PER SPECIFICATION.
4. TOP 3 FT. SHALL BE TOPSOIL EXCEPT AS SPECIFIED OR SHOWN ON DETAILS FOR SIDEWALKS, ROADWAY, STONE TERRACES AND RIP RAP AREAS.

LEGEND

330	EXISTING INDEX CONTOUR
329	EXISTING INTERMEDIATE CONTOUR
330	PROPOSED INDEX CONTOUR
329	PROPOSED INTERMEDIATE CONTOUR
	APPROXIMATE EDGE OF WATER AT NORMAL POOL

SCHULTZ PARK AND TRANSIENT DOCK

Owner:

CITY OF PADUCAH

JJR landscape architecture planning urban design civil engineering environmental science

JJR, LLC
625 WILLIAMSON STREET,
MADISON, WISCONSIN 53703
608.251.1177 T
608.251.6147 F
www.jjr-us.com

ISSUED FOR	REV	DATE

SEALS AND SIGNATURES

NOT FOR CONSTRUCTION

KEY PLAN

DRAWING TITLE

GRADING PLAN - CUT & FILL

0 20' 40' 80'
SCALE IN FEET

SCALE 24757.200

PROJECT NUMBER

DRAWING NUMBER C-3.1

FILE:P:\24757\200\CAD\sheet\24757-200-SH-GRAD.dwg USER:jbragero DATE:Oct 08 2009 TIME: 01:19 pm

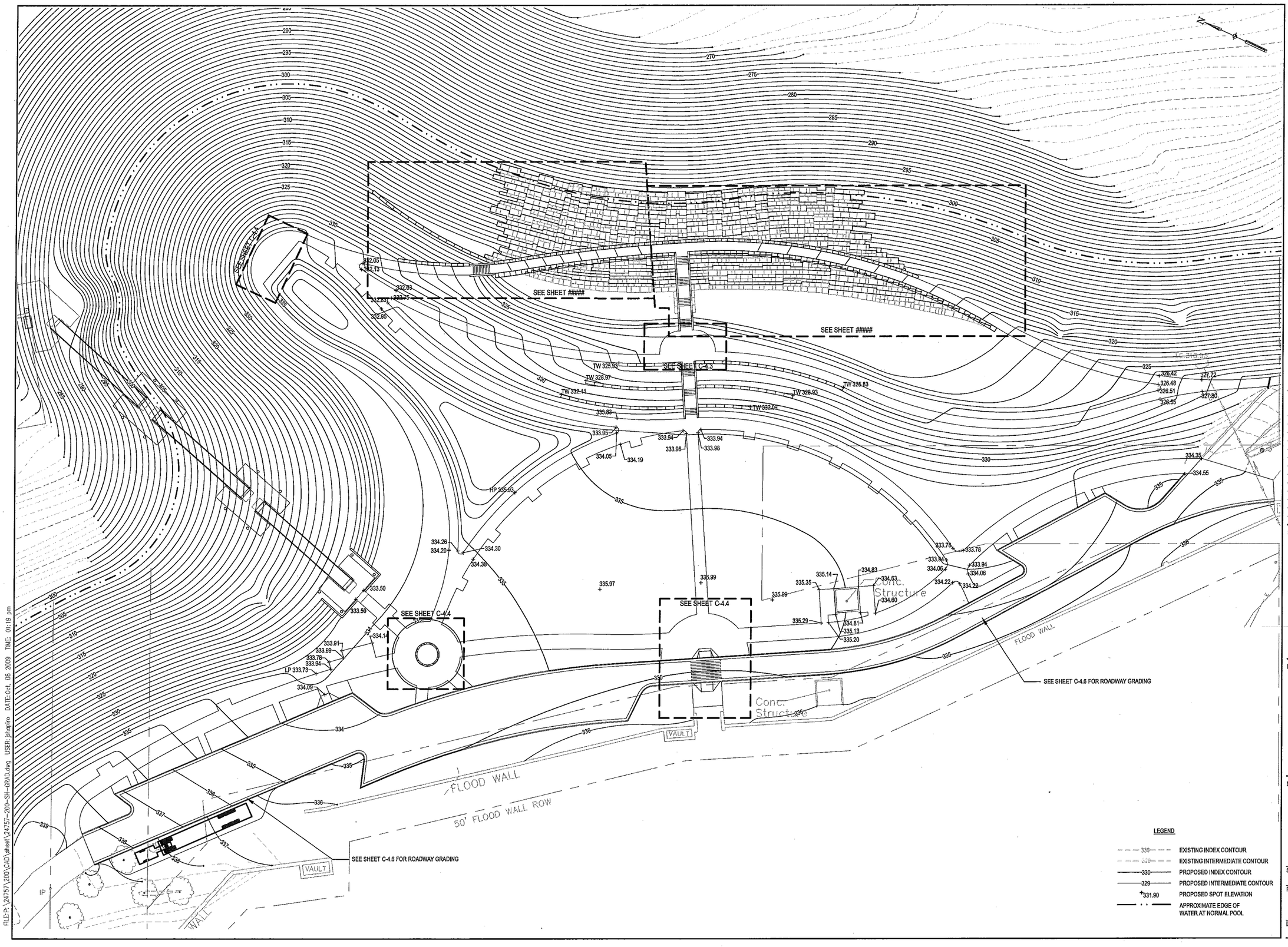

LEGEND

- 330 — EXISTING INDEX CONTOUR
- 329 — EXISTING INTERMEDIATE CONTOUR
- 330 — PROPOSED INDEX CONTOUR
- 329 — PROPOSED INTERMEDIATE CONTOUR
- +331.90 — PROPOSED SPOT ELEVATION
- APPROXIMATE EDGE OF WATER AT NORMAL POOL

SCHULTZ PARK AND TRANSIENT DOCK

Owner:

CITY OF PADUCAH

JJR
landscape architecture
planning
urban design
civil engineering
environmental science

JJR, LLC
625 WILLIAMSON STREET,
MADISON, WISCONSIN 53703
608.251.1177 T
608.251.6147 F
www.jjr-us.com

ISSUED FOR	REV	DATE

SEALS AND SIGNATURES

NOT FOR CONSTRUCTION

KEY PLAN

DRAWING TITLE

GRADING PLAN - OVERALL

0 15' 30' 60'
SCALE IN FEET

SCALE 24757.200

PROJECT NUMBER

DRAWING NUMBER C-3.2

FILE:P:\24757\200\CAD\sheet\24757-200-SH-GRAD.dwg USER:jallopiro DATE:Oct. 08 2009 TIME: 01:19 pm

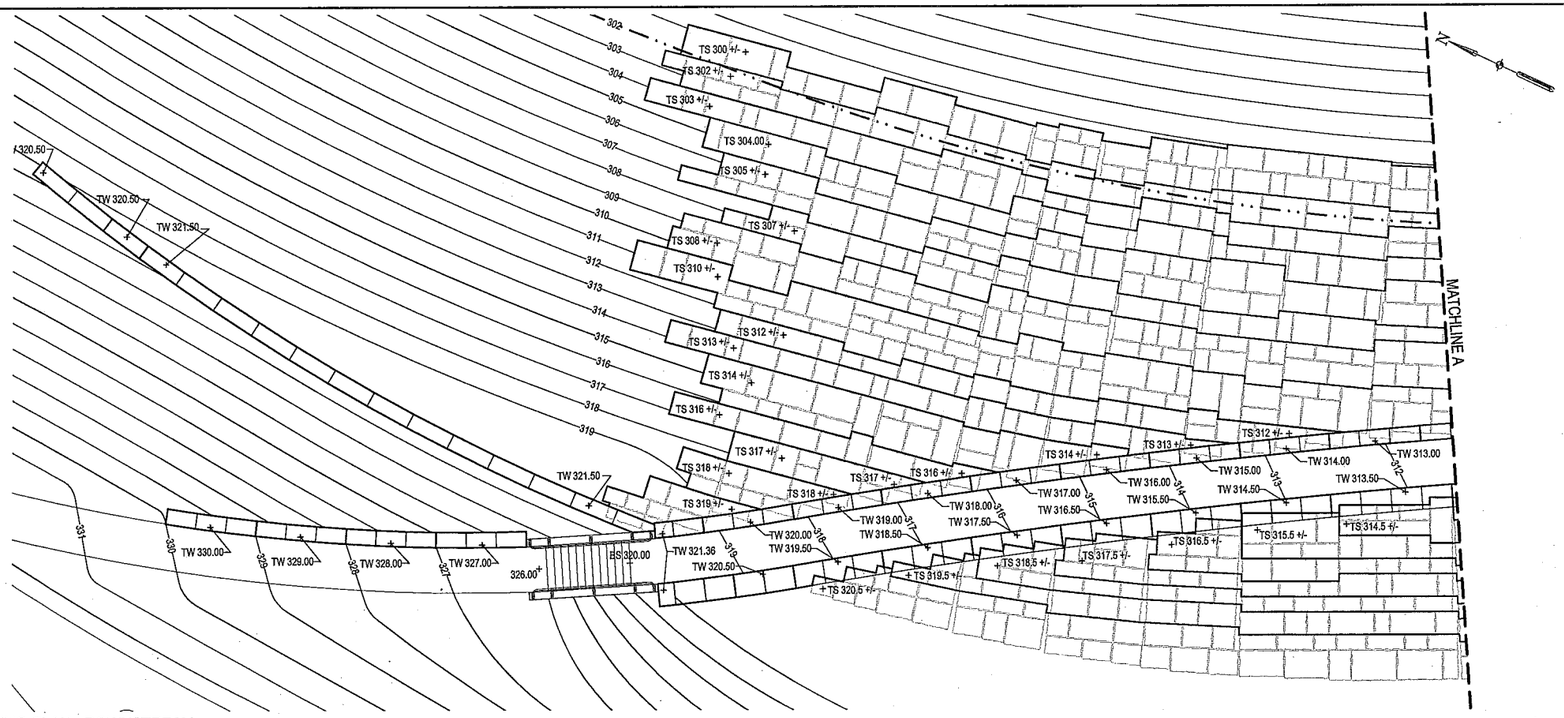

1 C-3.3 GRADING PLAN - DOWNSTREAM

PLAN

SCALE: 1" = 10'

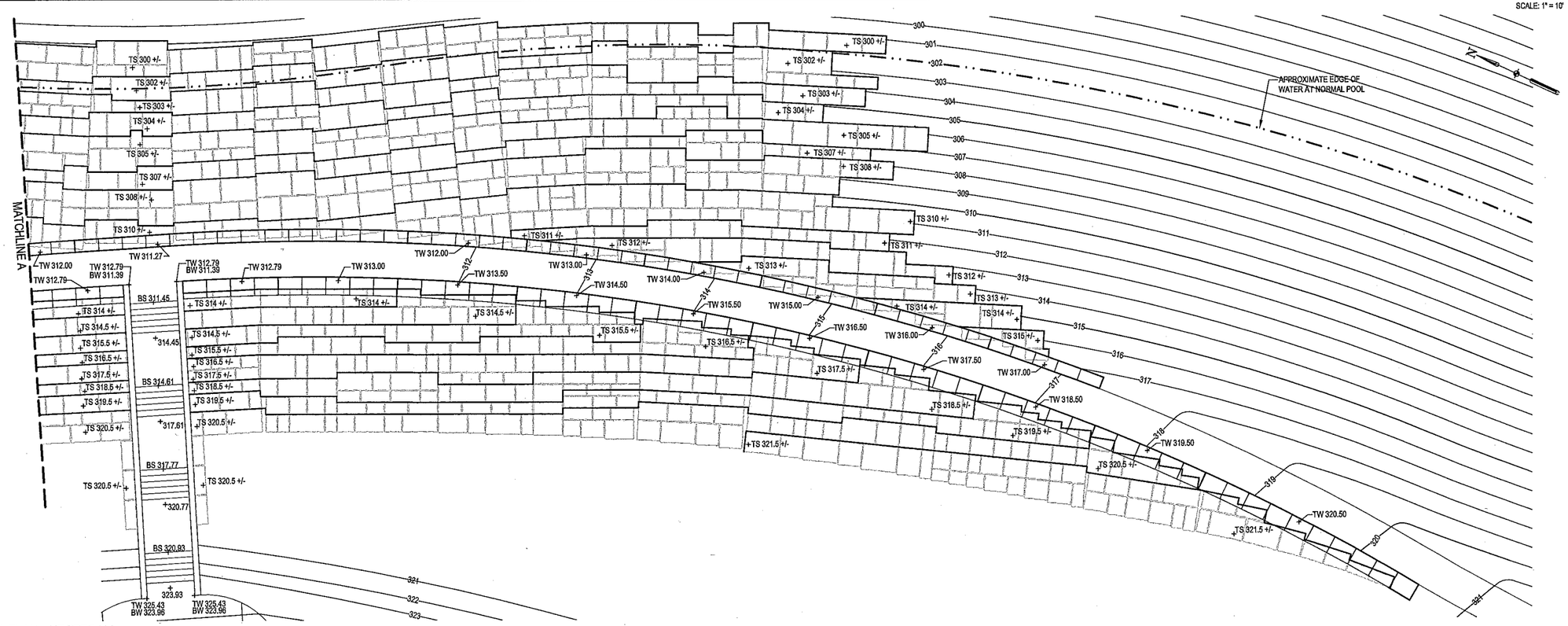

2 C-3.3 GRADING PLAN - UPSTREAM

PLAN

SCALE: 1" = 10'

LEGEND

330	EXISTING INDEX CONTOUR
329	EXISTING INTERMEDIATE CONTOUR
330	PROPOSED INDEX CONTOUR
329	PROPOSED INTERMEDIATE CONTOUR
+331.90	PROPOSED SPOT ELEVATION
	APPROXIMATE EDGE OF WATER AT NORMAL POOL

NOTE:

TOP OF STONE ELEVATIONS ARE FOR REFERENCE ONLY. SEE DETAIL 3/C-8.7 FOR STONE SIZE VARIATIONS.

SCHULTZ PARK AND TRANSIENT DOCK

Owner:

CITY OF PADUCAH

JJR landscape architecture planning urban design civil engineering environmental science

JJR, LLC
625 WILLIAMSON STREET,
MADISON, WISCONSIN 53703
608.251.1177 T
608.251.6147 F
www.jjr-us.com

ISSUED FOR	REV	DATE

SEALS AND SIGNATURES

NOT FOR CONSTRUCTION

KEY PLAN

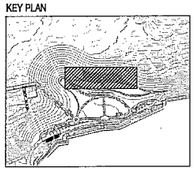

DRAWING TITLE

GRADING PLAN - NORTH

0 5' 10' 20'
SCALE IN FEET

SCALE 24757.200

PROJECT NUMBER

DRAWING NUMBER C-3.3

FILE:P:\24757\200\CAD\sheet\24757-200-SH-GRAD.dwg USER: jshapiro DATE: Oct. 08 2009 TIME: 01:19 pm

SCHULTZ PARK AND TRANSIENT DOCK

Owner:

CITY OF PADUCAH

JJR landscape architecture planning urban design civil engineering environmental science

JJR, LLC
625 WILLIAMSON STREET,
MADISON, WISCONSIN 53703
608.251.1177 T
608.251.6147 F
www.jjr-us.com

ISSUED FOR	REV	DATE

SEALS AND SIGNATURES

NOT FOR CONSTRUCTION

KEY PLAN

DRAWING TITLE

LAYOUT PLAN - OVERALL

0 15' 30' 60'
SCALE IN FEET

SCALE 24757.200

PROJECT NUMBER

DRAWING NUMBER C-4.1

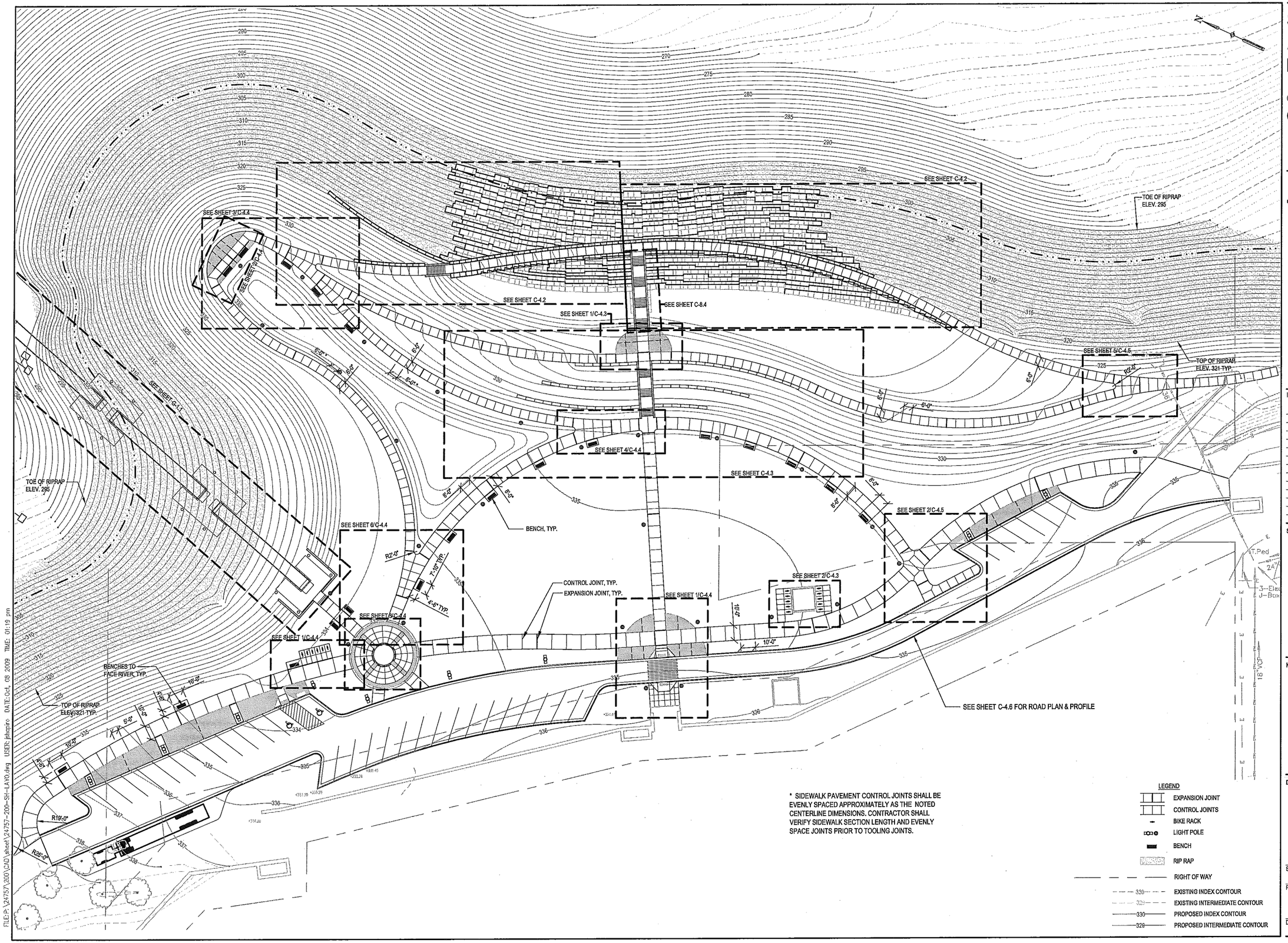

* SIDEWALK PAVEMENT CONTROL JOINTS SHALL BE EVENLY SPACED APPROXIMATELY AS THE NOTED CENTERLINE DIMENSIONS. CONTRACTOR SHALL VERIFY SIDEWALK SECTION LENGTH AND EVENLY SPACE JOINTS PRIOR TO TOOLING JOINTS.

FILE:P:\24757\200\CAD\sheet\24757-200-SH-LAYO.dwg USER: jdinapiro DATE:Oct, 08 2009 TIME: 01:19 pm

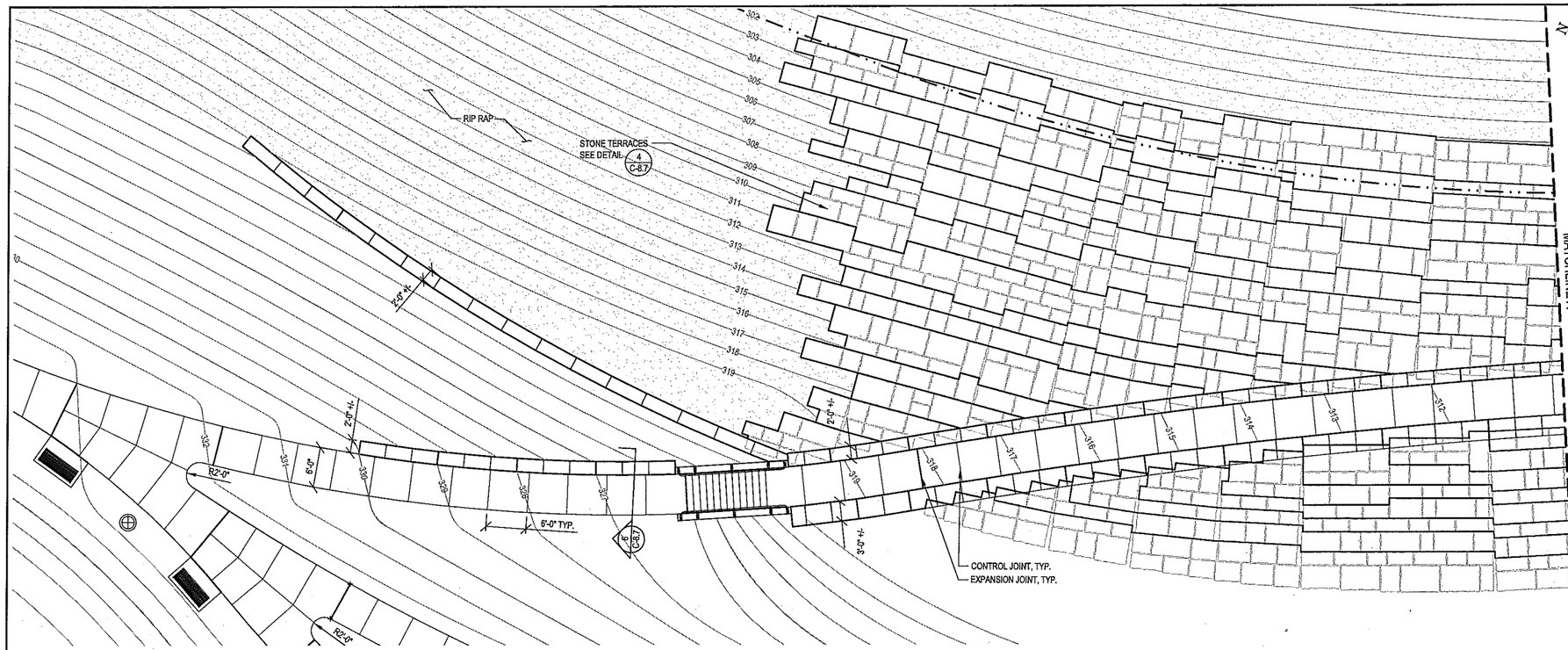

1 C-4.2 LAYOUT PLAN - DOWNSTREAM

PLAN

SCALE: 1" = 10'

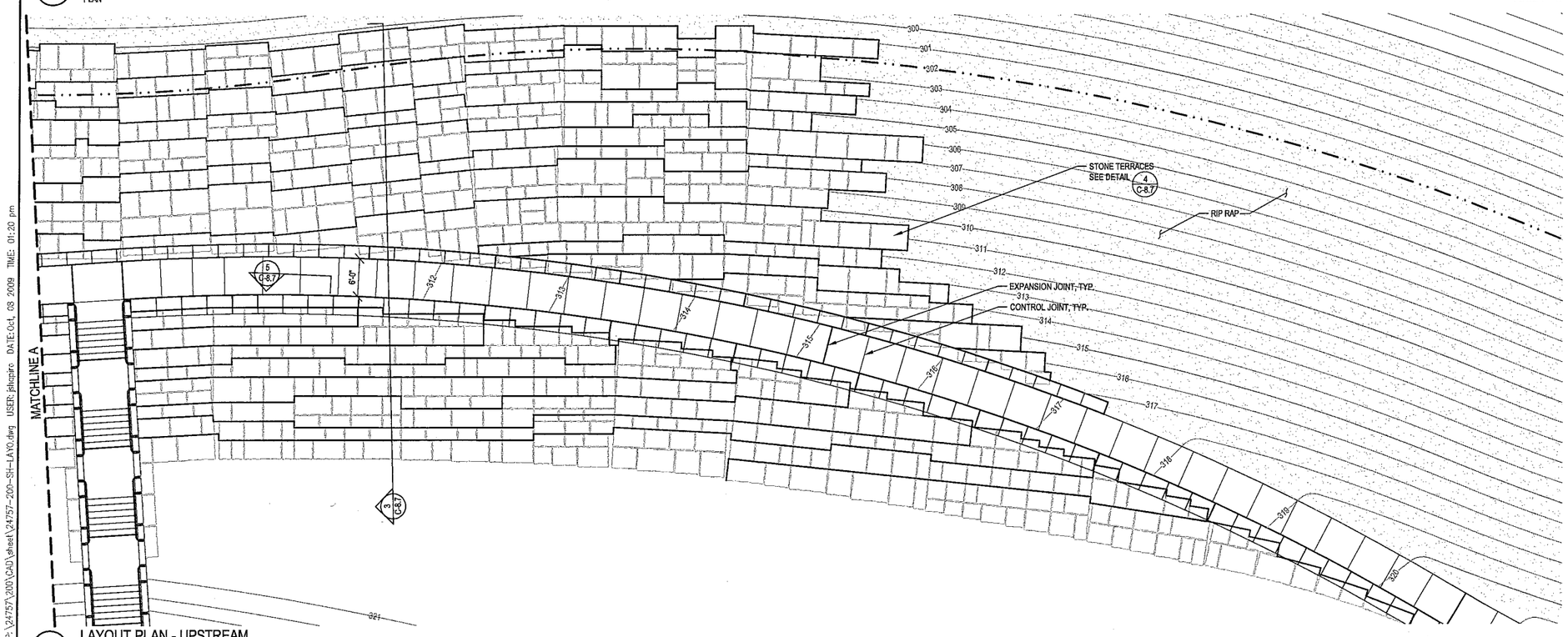

2 C-4.2 LAYOUT PLAN - UPSTREAM

PLAN

SCALE: 1" = 10'

LEGEND

- EXPANSION JOINT
- CONTROL JOINTS
- RIP RAP
- 330 EXISTING INDEX CONTOUR
- 329 EXISTING INTERMEDIATE CONTOUR
- 330 PROPOSED INDEX CONTOUR
- 329 PROPOSED INTERMEDIATE CONTOUR
- APPROXIMATE EDGE OF WATER AT NORMAL POOL

SCHULTZ PARK AND TRANSIENT DOCK

Owner:

CITY OF PADUCAH

JJR landscape architecture planning urban design civil engineering environmental science

JJR, LLC
625 WILLIAMSON STREET,
MADISON, WISCONSIN 53703
608.251.1177 T
608.251.6147 F
www.jjr-us.com

ISSUED FOR	REV	DATE

SEALS AND SIGNATURES

NOT FOR CONSTRUCTION

KEY PLAN

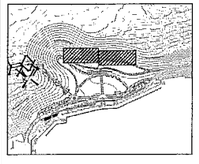

DRAWING TITLE

LAYOUT PLAN - NORTH

0 5' 10' 20'
SCALE IN FEET

SCALE 24757.200

PROJECT NUMBER

C-4.2

DRAWING NUMBER

FILE:P:\24757\200\CAD\sheet\24757-200-SH-LAYO.dwg USER:jsiccpro DATE:Oct. 03 2009 TIME: 01:20 pm

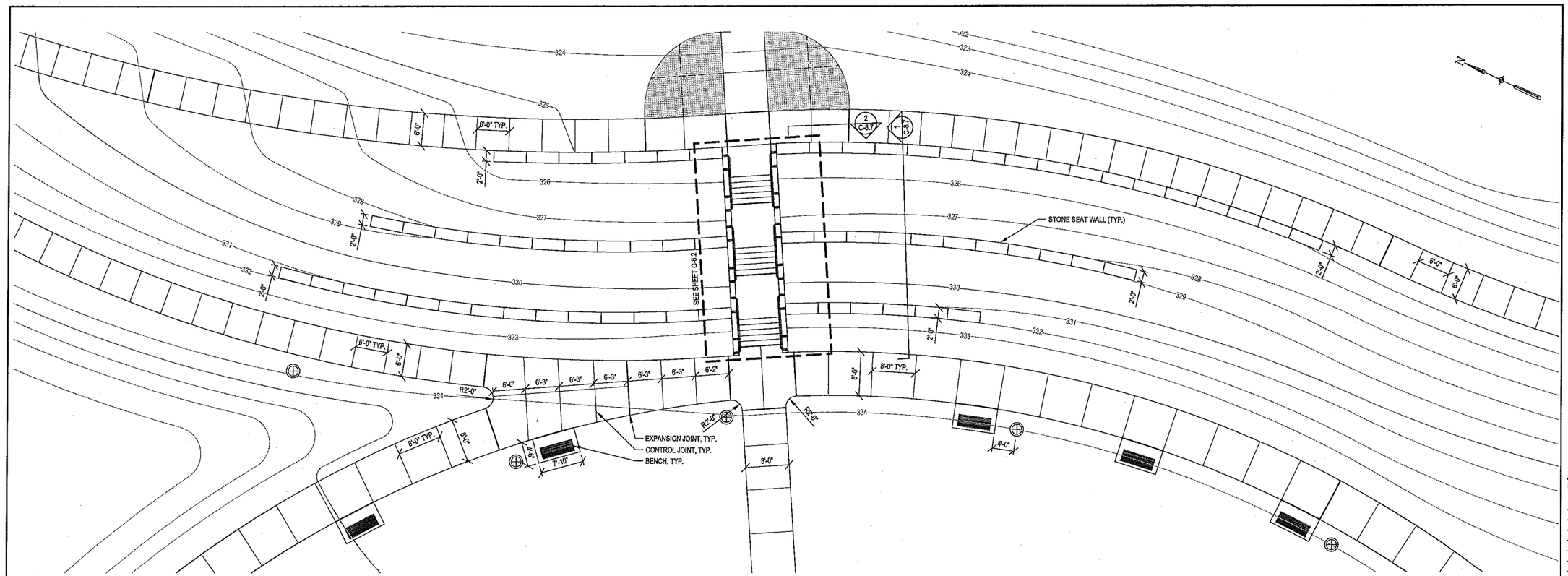

1 C-4.3 LAYOUT PLAN - CENTRAL

PLAN

SCALE: 1" = 10'

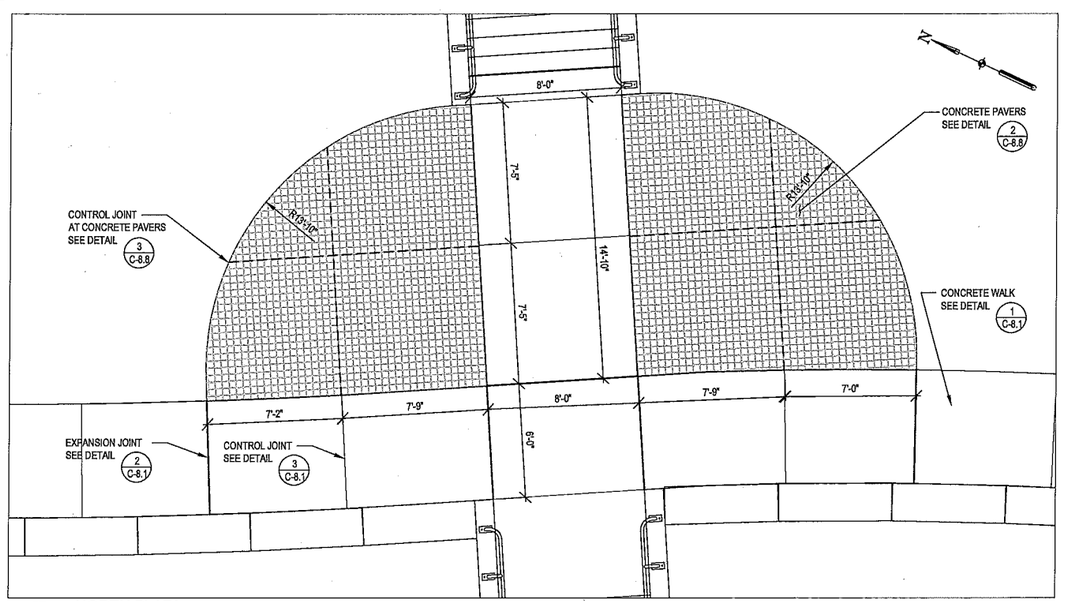

2 C-4.3 NORTH PLAZA

SCALE: 1/4" = 1'

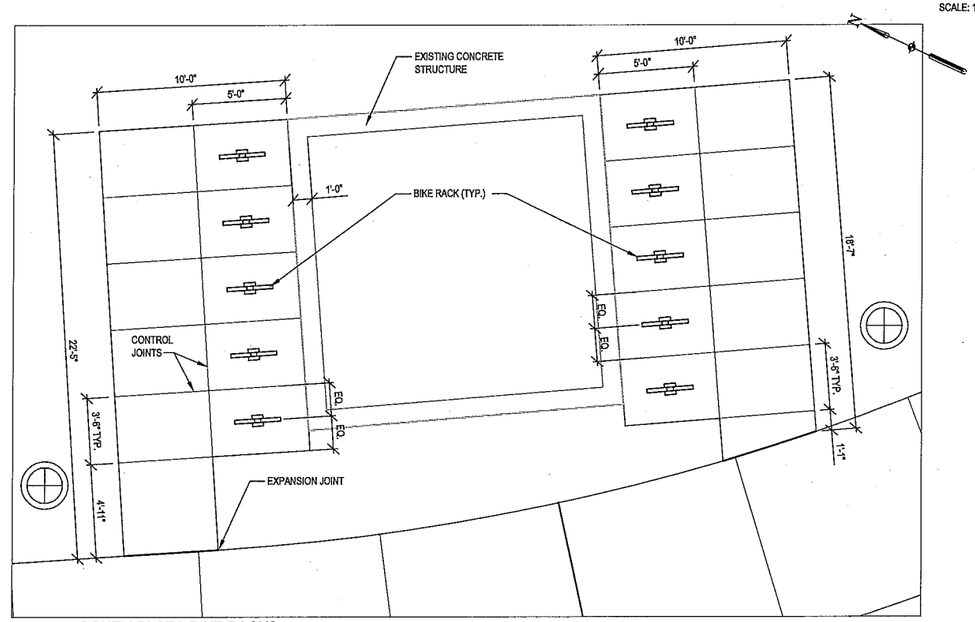

3 C-4.3 SOUTH PLAZA BIKE RACKS

SCALE: 1/4" = 1'

LEGEND

EXPANSION JOINT	330 EXISTING INDEX CONTOUR
CONTROL JOINT	329 EXISTING INTERMEDIATE CONTOUR
LIGHT POLE	330 PROPOSED INDEX CONTOUR
BENCH	329 PROPOSED INTERMEDIATE CONTOUR

SCHULTZ PARK AND TRANSIENT DOCK

Owner:

CITY OF PADUCAH

JJR landscape architecture planning urban design civil engineering environmental science

JJR, LLC
625 WILLIAMSON STREET,
MADISON, WISCONSIN 53703
608.251.1177 T
608.251.6147 F
www.jjr-us.com

ISSUED FOR	REV	DATE

SEALS AND SIGNATURES

NOT FOR CONSTRUCTION

KEY PLAN

DRAWING TITLE

LAYOUT PLAN - CENTRAL

0 5' 10' 20'
SCALE IN FEET

SCALE

PROJECT NUMBER 24757.200

DRAWING NUMBER C-4.3

FILE:P:\24757\200\CAD\sheet\24757-200-SH-LAYO.dwg USER: jkincaid DATE: Oct. 08 2009 TIME: 01:20 pm

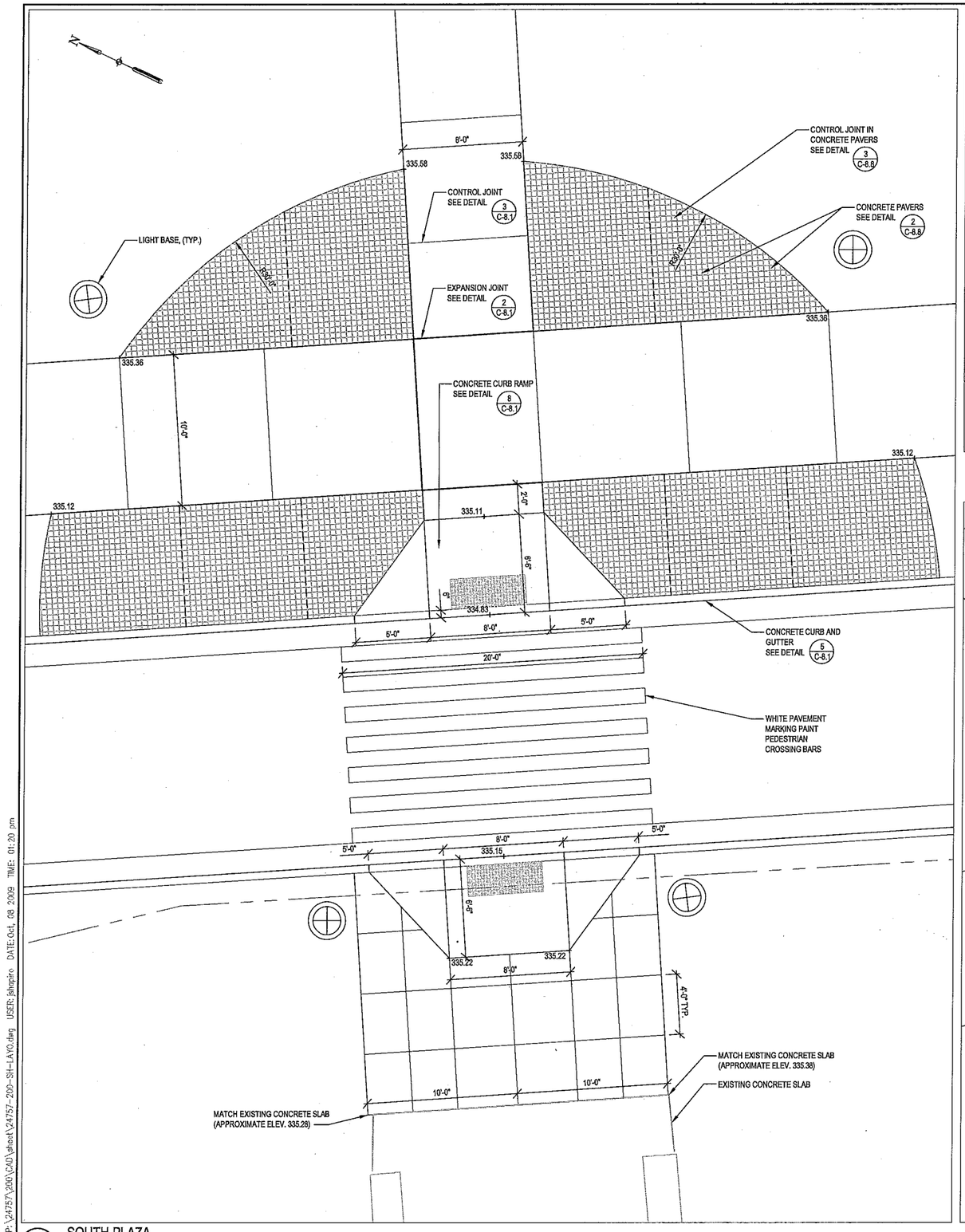

1 C-4.4 SOUTH PLAZA

SCALE: 1/4" = 1'

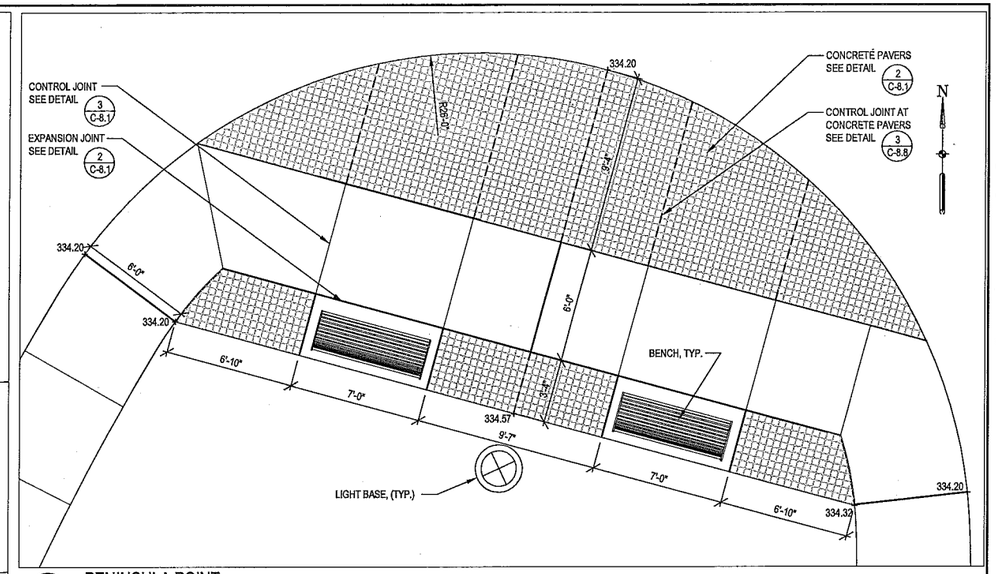

2 C-4.4 PENINSULA POINT

SCALE: 1/4" = 1'

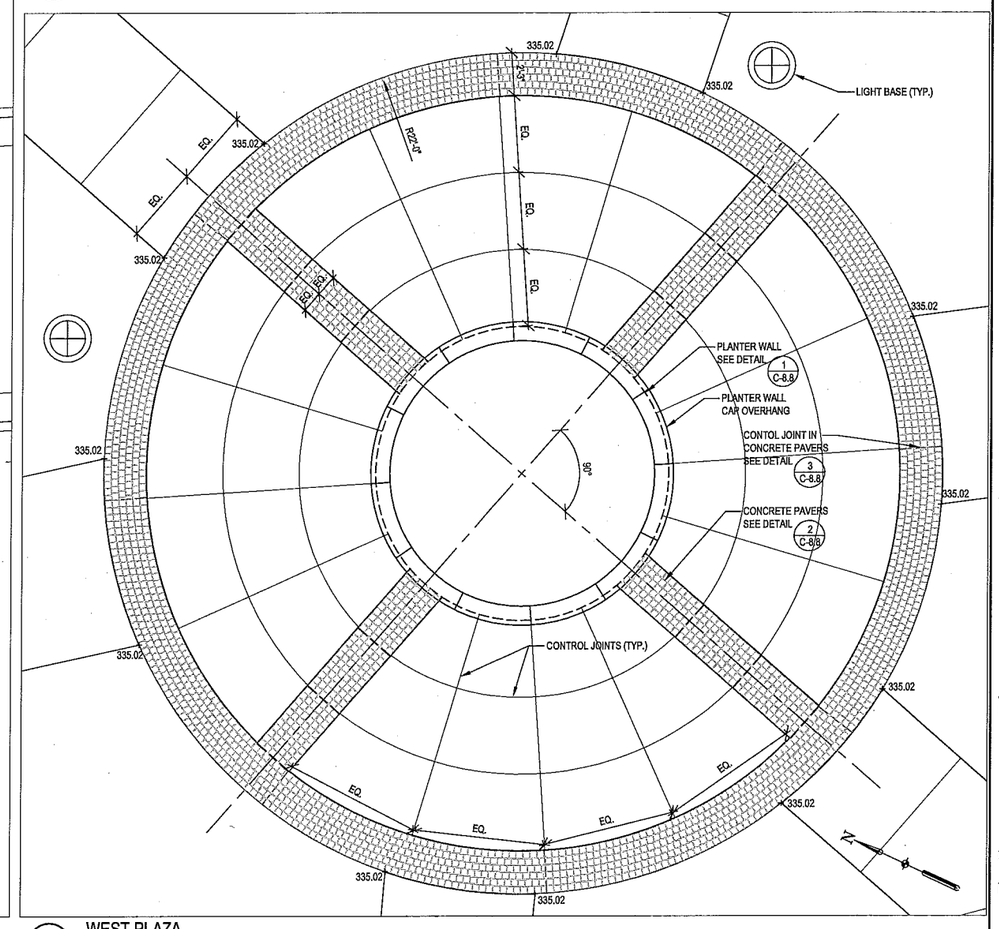

3 C-4.4 WEST PLAZA

SCALE: 1/4" = 1'

SCHULTZ PARK AND TRANSIENT DOCK

Owner:

CITY OF PADUCAH

JJR landscape architecture planning urban design civil engineering environmental science

JJR, LLC
625 WILLIAMSON STREET,
MADISON, WISCONSIN 53703
608.251.1177 T
608.251.6147 F
www.jjr-us.com

ISSUED FOR	REV	DATE

SEALS AND SIGNATURES

NOT FOR CONSTRUCTION

KEY PLAN

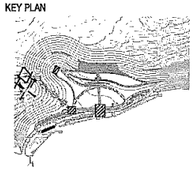

DRAWING TITLE

LAYOUT PLAN - ENLARGEMENTS

0 2' 4' 8'
SCALE IN FEET

SCALE

PROJECT NUMBER 24757.200

DRAWING NUMBER C-4.4

FILE:P:\24757\200\CAD\sheet\24757-200-SH-LAYO.dwg USER: jshapiro DATE: Oct. 08 2009 TIME: 01:20 pm

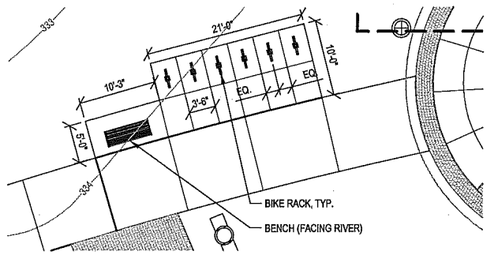

1 C-4.5 NORTHWEST BIKE RACK LAYOUT

SCALE: 1" = 10'

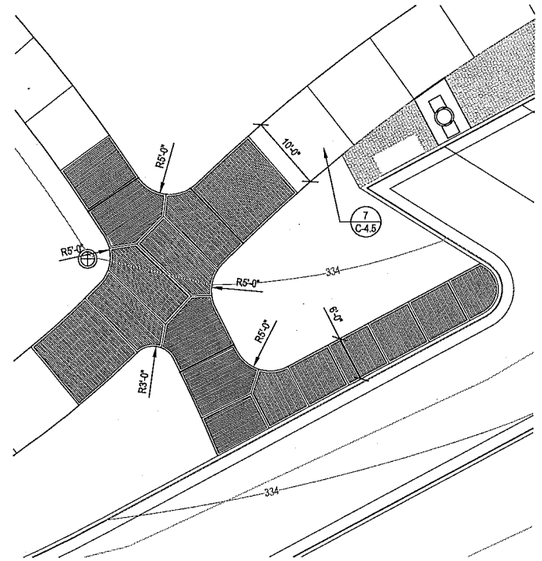

2 C-4.5 TYPICAL WALK PATTERNING - BROOM FINISH DIRECTIONS

SCALE: 1" = 10'

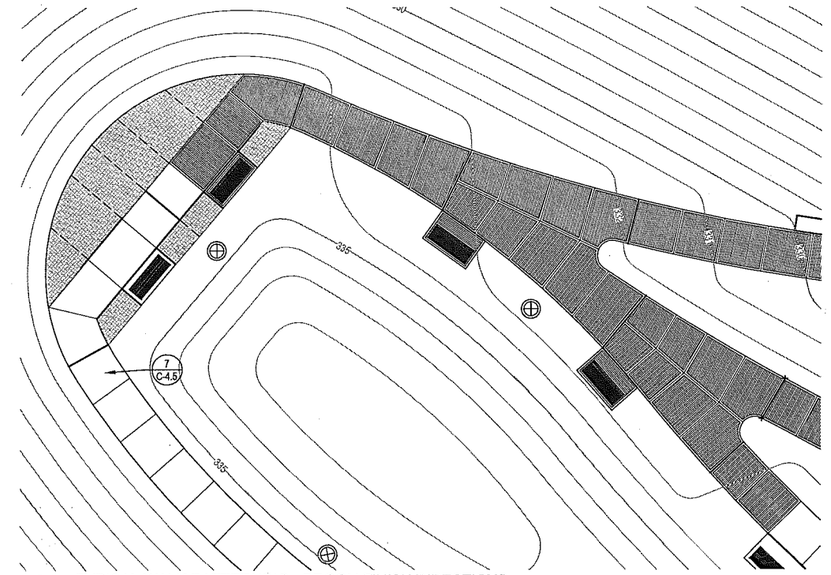

3 C-4.5 TYPICAL WALK PATTERNING - BROOM FINISH DIRECTIONS

SCALE: 1" = 10'

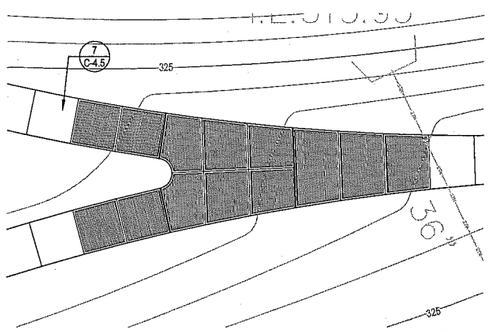

4 C-4.5 TYPICAL WALK PATTERNING - BROOM FINISH DIRECTIONS

SCALE: 1" = 10'

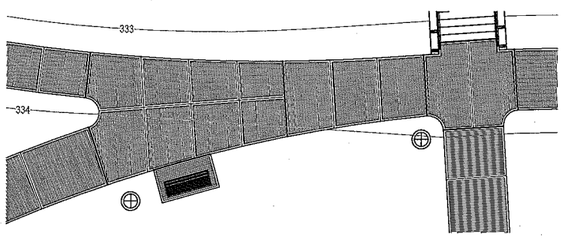

5 C-4.5 TYPICAL WALK PATTERNING - BROOM FINISH DIRECTIONS

SCALE: 1" = 10'

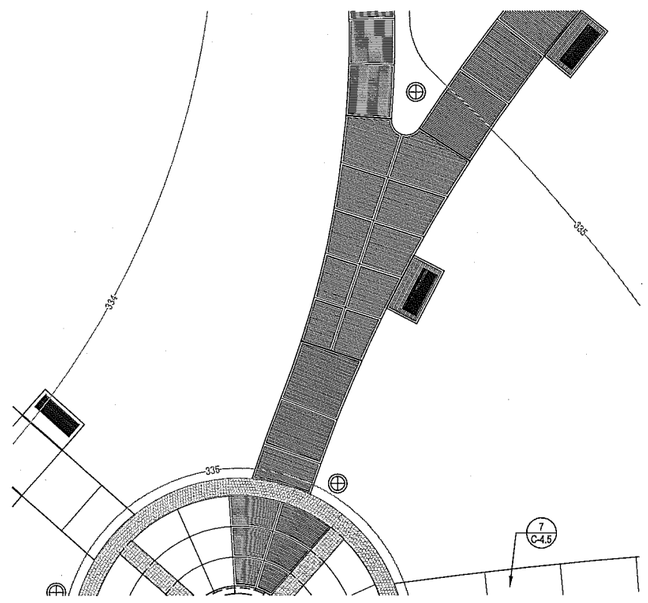

6 C-4.5 TYPICAL WALK PATTERNING - BROOM FINISH DIRECTIONS

SCALE: 1" = 10'

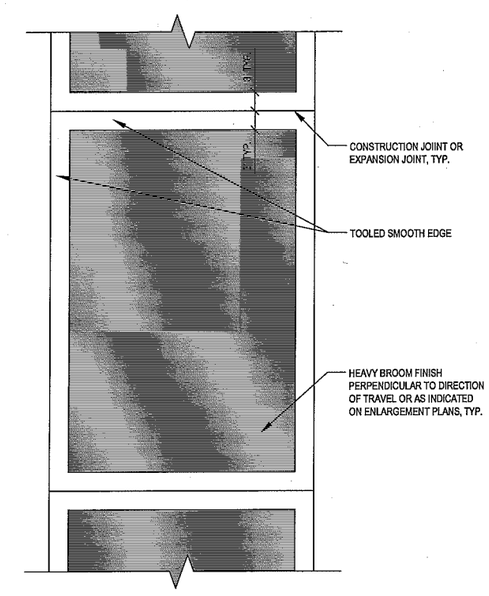

7 C-4.5 TYPICAL CONCRETE WALK FINISH

SCALE: 1" = 1'

SCHULTZ PARK AND TRANSIENT DOCK

Owner:

CITY OF PADUCAH

JJR landscape architecture planning urban design civil engineering environmental science

JJR, LLC
625 WILLIAMSON STREET,
MADISON, WISCONSIN 53703
608.251.1177 T
608.251.6147 F
www.jjr-us.com

ISSUED FOR	REV	DATE

SEALS AND SIGNATURES

NOT FOR CONSTRUCTION

KEY PLAN

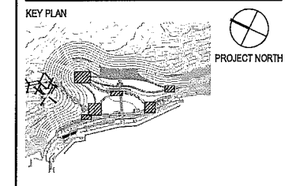

DRAWING TITLE

DETAIL WALKS
PATTERNING
ENLARGEMENT PLANS

0 5' 10' 20'
SCALE IN FEET

SCALE

PROJECT NUMBER 24757.200

DRAWING NUMBER C-4.5

FILE:P:\24757\200\CAD\sheet\24757-200-SH-LAYO.dwg USER: jshapiro DATE: Oct. 08 2009 TIME: 01:21 pm

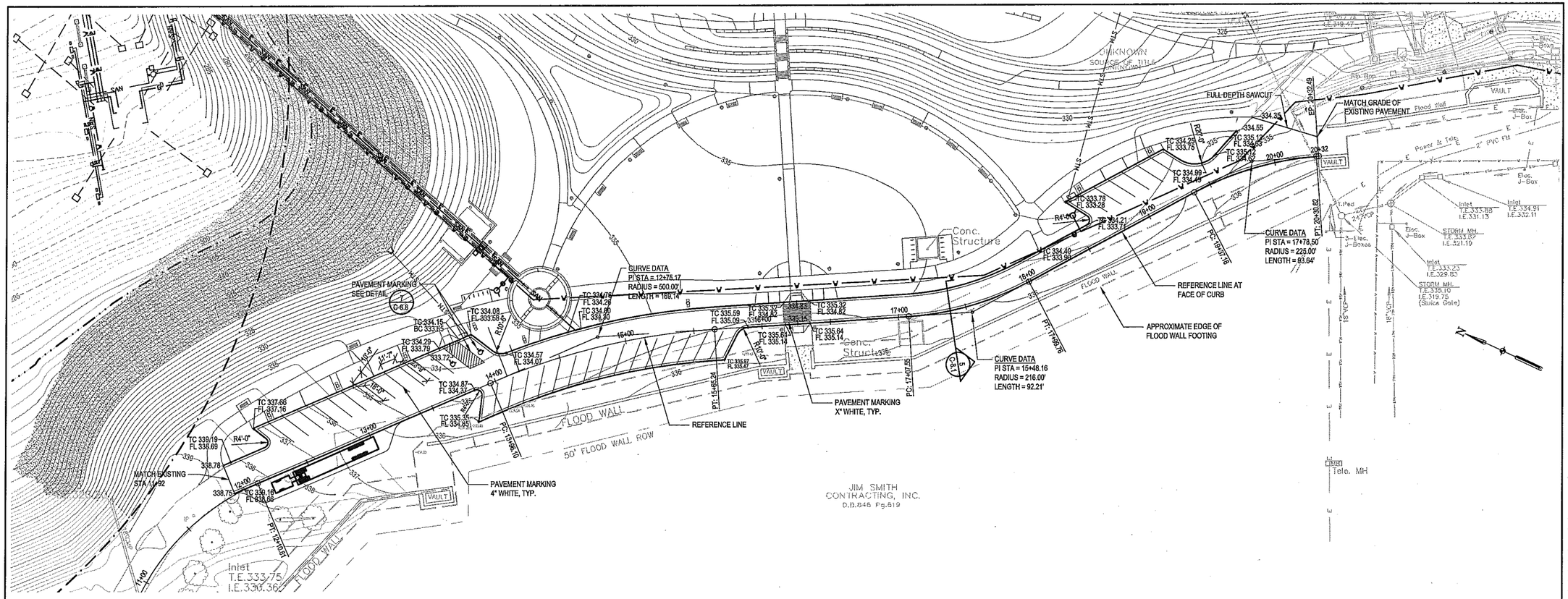

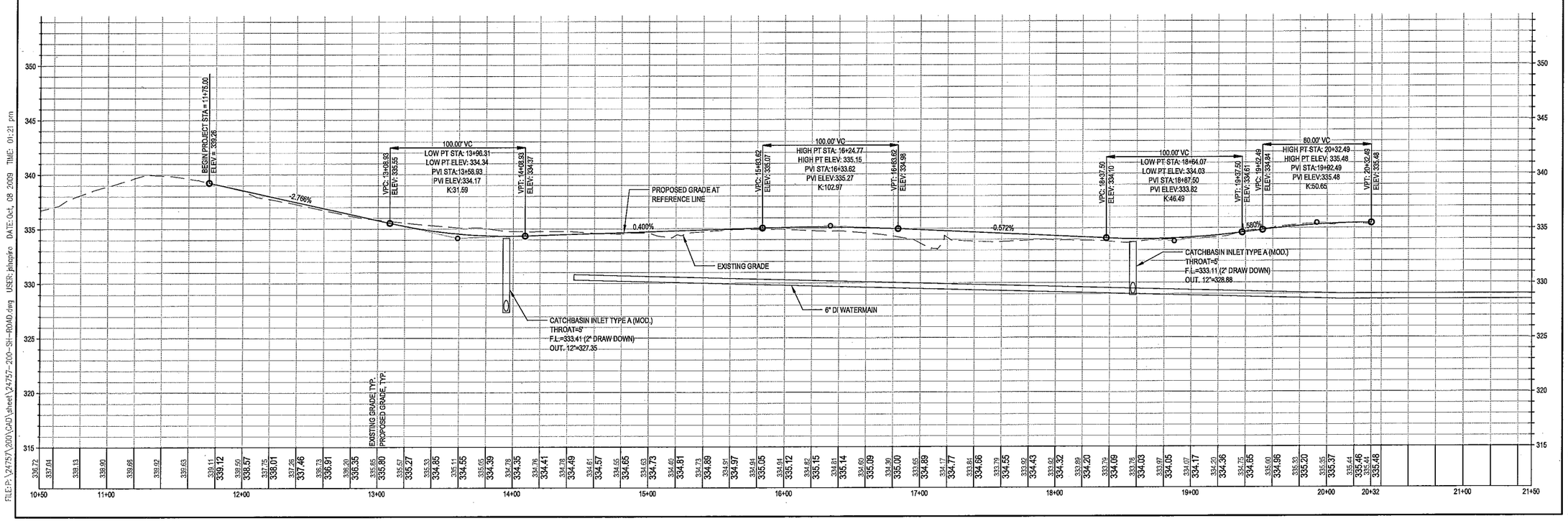

SCHULTZ PARK AND TRANSIENT DOCK

Owner:

CITY OF PADUCAH

JJR
landscape architecture
planning
urban design
civil engineering
environmental science

JJR, LLC
625 WILLIAMSON STREET,
MADISON, WISCONSIN 53703
608.251.1177 T
608.251.6147 F
www.jjr-us.com

ISSUED FOR	REV	DATE

SEALS AND SIGNATURES

NOT FOR CONSTRUCTION

KEY PLAN

DRAWING TITLE

ROAD PLAN & PROFILE

0 20' 40' 80'
SCALE IN FEET

SCALE

PROJECT NUMBER 24757.200

DRAWING NUMBER C-4.6

FILE:P:\24757\200\CAD\sheet\24757-200-SH-ROAD.dwg USER: pjhopke DATE: Oct. 08 2009 TIME: 01:21 pm

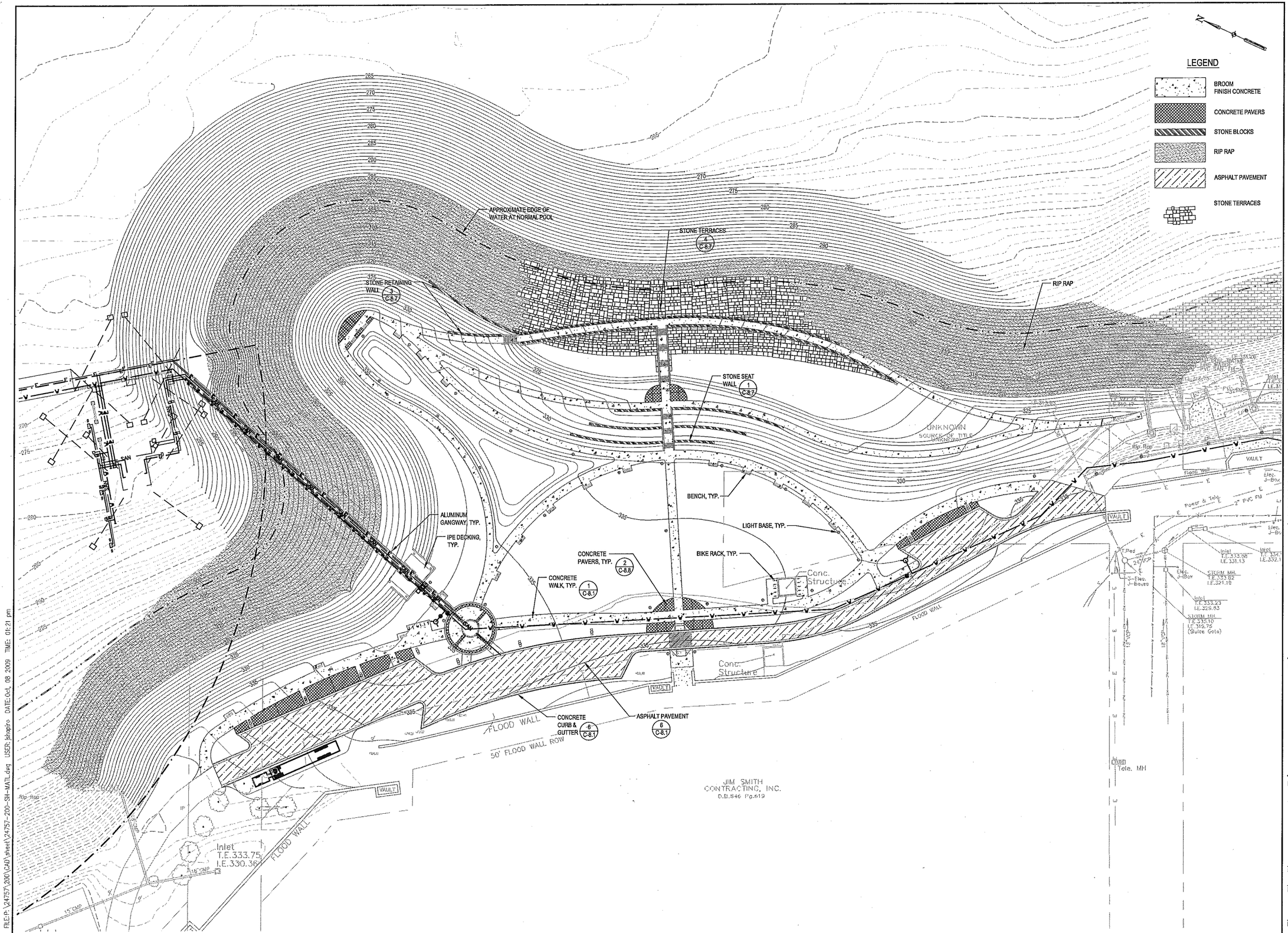

SCHULTZ PARK AND TRANSIENT DOCK

Owner:

CITY OF PADUCAH

JJR
landscape architecture
planning
urban design
civil engineering
environmental science

JJR, LLC
625 WILLIAMSON STREET,
MADISON, WISCONSIN 53703
608.251.1177 T
608.251.6147 F
www.jjr-us.com

ISSUED FOR	REV	DATE

SEALS AND SIGNATURES

NOT FOR CONSTRUCTION

KEY PLAN

DRAWING TITLE

MATERIALS PLAN

0 20' 40' 80'
SCALE IN FEET

SCALE 24757.200

PROJECT NUMBER

DRAWING NUMBER C-5.1

FILE:P:\24757\200\CAD\sheet\24757-200-SH-MATL.dwg USER: bhagnio DATE: Oct, 08 2009 TIME: 01:21 pm

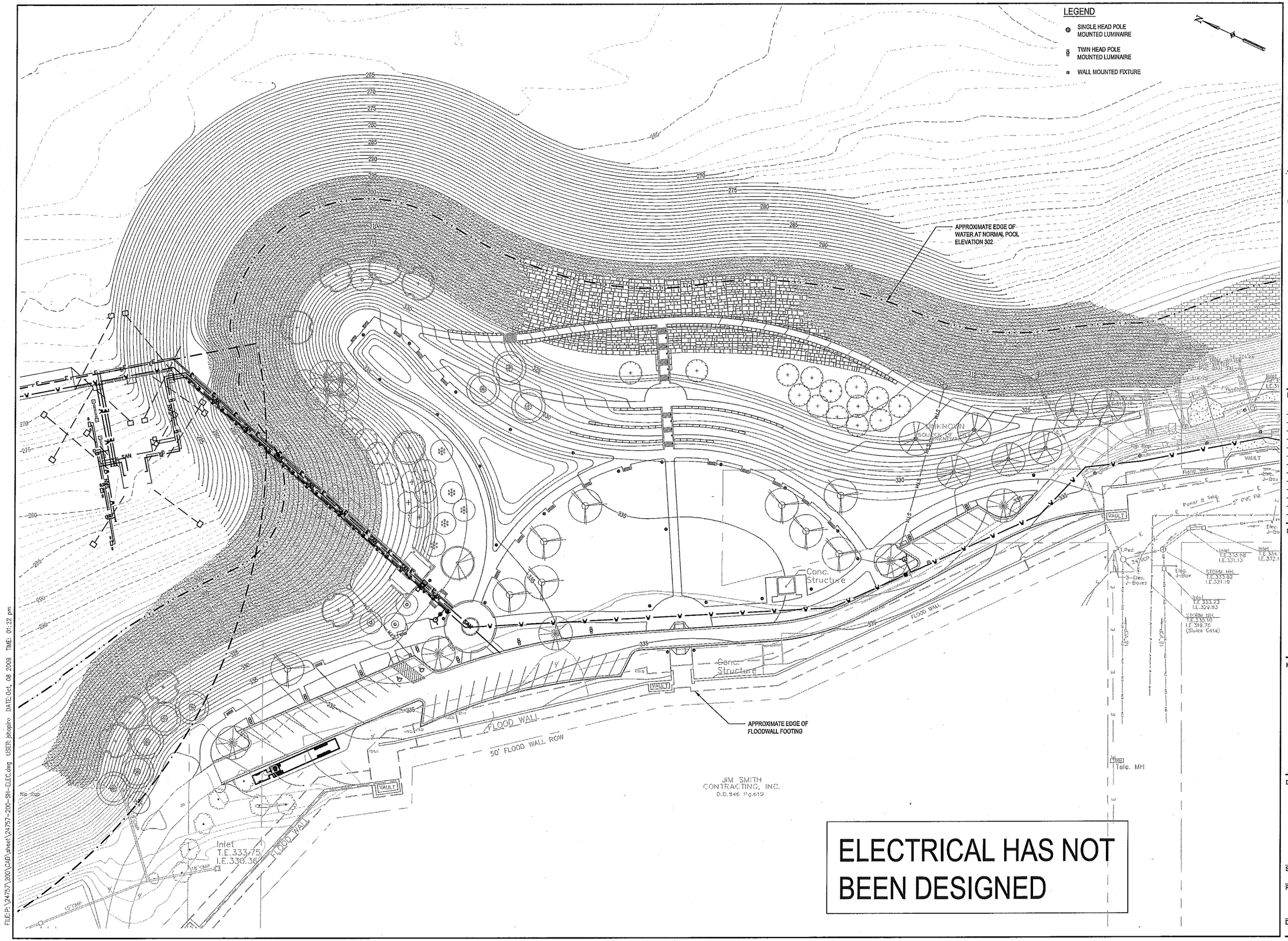

SCHULTZ PARK AND TRANSIENT DOCK

Owner:

CITY OF PADUCAH

JJR landscape architecture planning urban design civil engineering environmental science

JJR, LLC
625 WILLIAMSON STREET,
MADISON, WISCONSIN 53703
608.251.1177 T
608.251.6147 F
www.jjr-us.com

ISSUED FOR	REV	DATE

SEALS AND SIGNATURES

NOT FOR CONSTRUCTION

KEY PLAN

DRAWING TITLE

ELECTRICAL PLAN

0 20' 40' 80'
SCALE IN FEET

SCALE 24757.200

PROJECT NUMBER

DRAWING NUMBER C-6.1

FILE: P:\24757\200\CAD\sheet\24757-200-SH-ELEC.dwg USER: jshapiro DATE: Oct, 08 2009 TIME: 01:22 pm

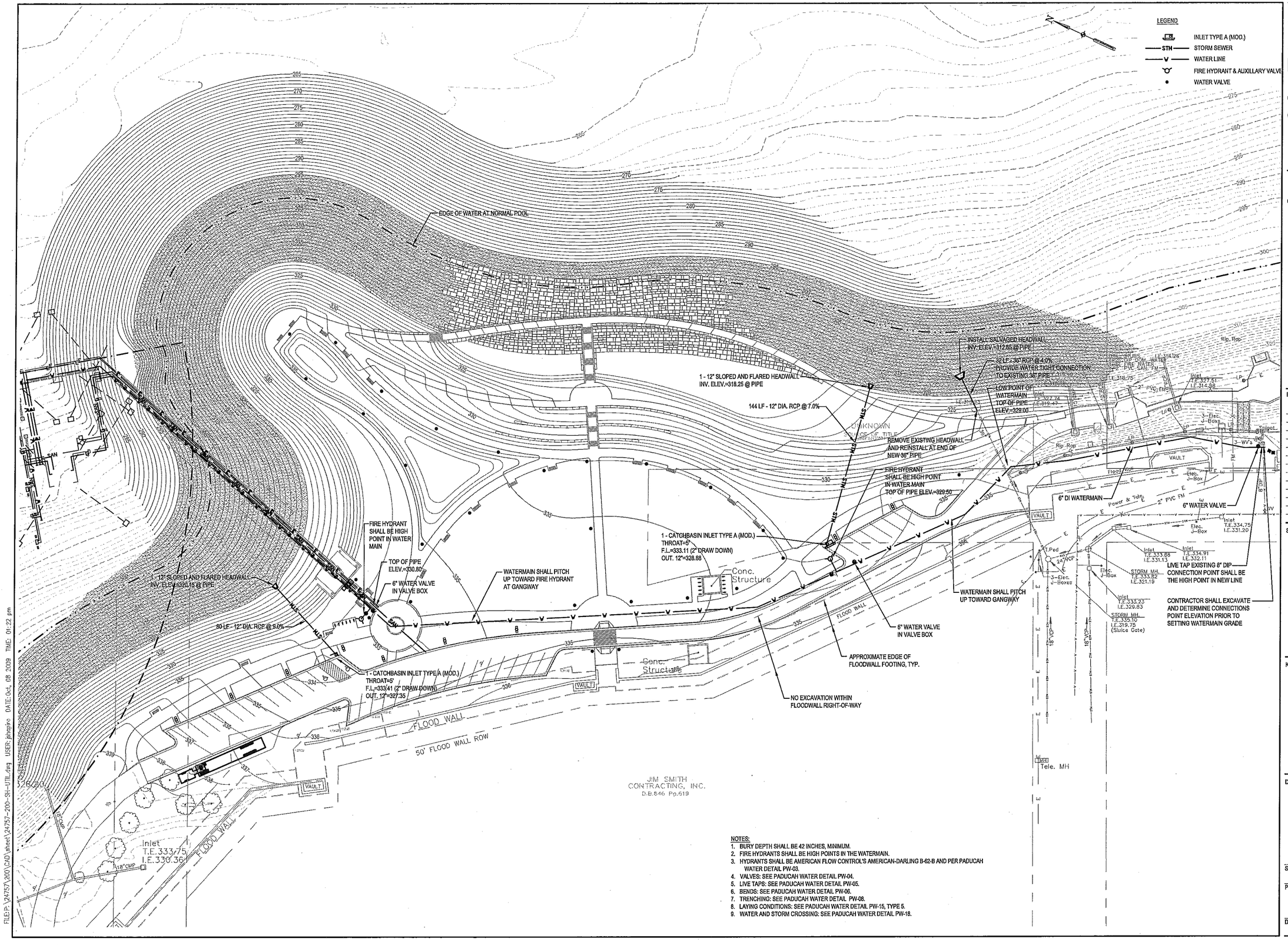

NOTES:

1. BURY DEPTH SHALL BE 42 INCHES, MINIMUM.
2. FIRE HYDRANTS SHALL BE HIGH POINTS IN THE WATERMAIN.
3. HYDRANTS SHALL BE AMERICAN FLOW CONTROL'S AMERICAN-DARLING B-62-B AND PER PADUCAH WATER DETAIL PW-03.
4. VALVES: SEE PADUCAH WATER DETAIL PW-04.
5. LIVE TAPS: SEE PADUCAH WATER DETAIL PW-05.
6. BENDS: SEE PADUCAH WATER DETAIL PW-06.
7. TRENCHING: SEE PADUCAH WATER DETAIL PW-08.
8. LAYING CONDITIONS: SEE PADUCAH WATER DETAIL PW-15, TYPE 5.
9. WATER AND STORM CROSSING: SEE PADUCAH WATER DETAIL PW-18.

SCHULTZ PARK AND TRANSIENT DOCK

Owner:

CITY OF PADUCAH

JJR
landscape architecture
planning
urban design
civil engineering
environmental science

JJR, LLC
625 WILLIAMSON STREET,
MADISON, WISCONSIN 53703
608.251.1177 T
608.251.6147 F
www.jjr-us.com

ISSUED FOR	REV	DATE

SEALS AND SIGNATURES

NOT FOR CONSTRUCTION

KEY PLAN

DRAWING TITLE

UTILITY PLAN

0 20' 40' 80'
SCALE IN FEET

SCALE 24757.200

PROJECT NUMBER

DRAWING NUMBER C-7.1

FILE:P:\24757\200\CAD\sheet\24757-200-SH-UTIL.dwg USER: jskopiro DATE: Oct. 08 2009 TIME: 01:22 pm

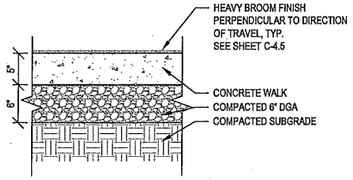

1 C-8.1 TYPICAL CONCRETE WALK

SCALE: 1" = 1'

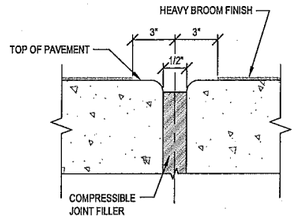

2 C-8.1 TYPICAL CONCRETE WALK EXPANSION JOINT

SCALE: NTS

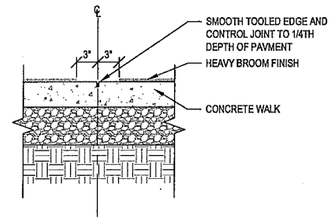

3 C-8.1 TYPICAL CONCRETE WALK CONTROL JOINT

SCALE: 1" = 1'

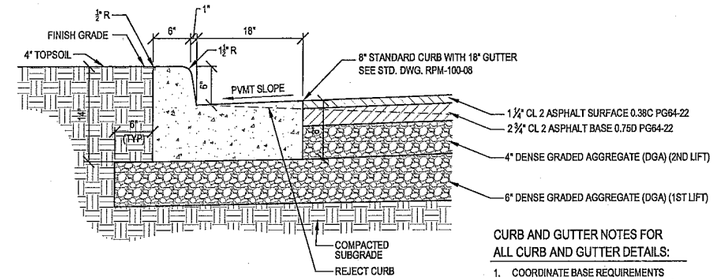

CURB AND GUTTER NOTES FOR ALL CURB AND GUTTER DETAILS:

1. COORDINATE BASE REQUIREMENTS WITH ADJACENT PAVEMENT SECTIONS.
2. COORDINATE GUTTER SLOPES WITH GRADING AND DRAINAGE PLANS.
3. IN AREAS OF MULTIPLE C/G SECTIONS USE 5' TRANSITION ZONE TO BLEND SECTION TO THE NEXT.

4 C-8.1 CONCRETE CURB & GUTTER AND PAVEMENT STRUCTURE - SECTION

SCALE: 1/2" = 1'

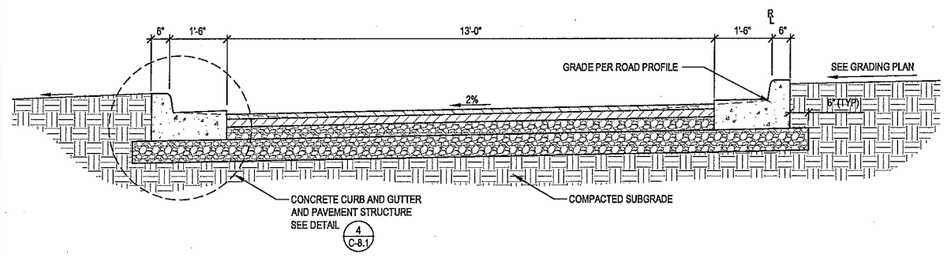

5 C-8.1 TYPICAL ROAD - SECTION

SCALE: 1/2" = 1'

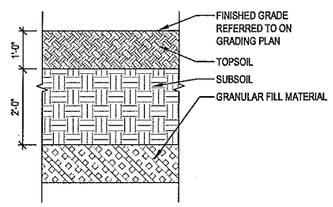

6 C-8.1 TYPICAL SOIL SECTION

SCALE: 1/2" = 1'

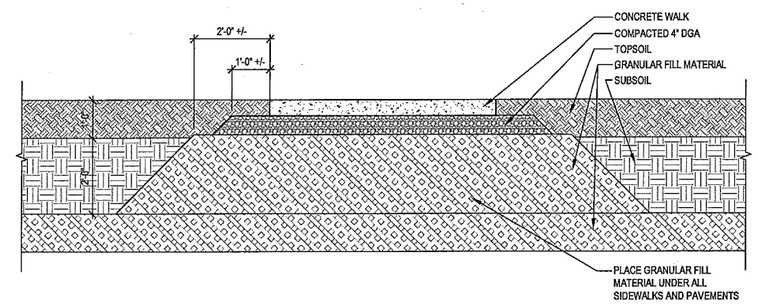

7 C-8.1 TYPICAL SECTION AT SIDEWALKS, PLAZAS, STAIRS, ETC.

SCALE: 1/2" = 1'

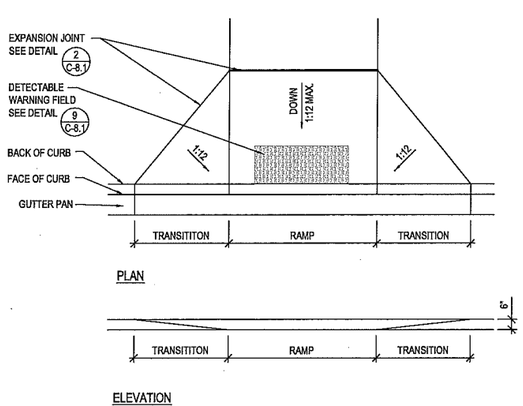

8 C-8.1 CURB RAMP - SECTION

SCALE: 1/4" = 1'

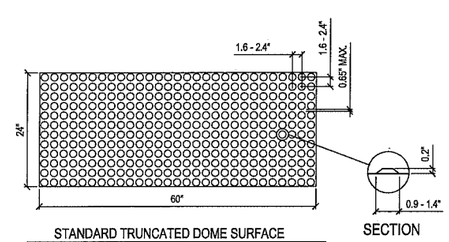

NOTES

1. RAMP RUNS SHALL BE 8.3% (1:12) OR LESS. LANDINGS AT THE TOP OF A RAMP RUN MUST BE LEVEL AND AT LEAST 48" x 48".
2. SURFACE TEXTURE OF THE RAMP SHALL BE OBTAINED BY COARSE BROOMING TRANSVERSE TO THE SLOPE.
3. REMOVE CONCRETE TO NEAREST JOINT IN RECONSTRUCTION PROJECTS.
4. DETECTABLE WARNING SURFACE:
   A. DETECTABLE WARNING SHALL CONSIST OF A STAINLESS STEEL, TRUNCATED DOME PANEL WITH SKID AND WEAR RESISTANT COATING.
   B. DETECTABLE WARNING SURFACE SHALL BE BLACK.
   C. TRUNCATED DOMES IN A DETECTABLE WARNING SURFACE SHALL HAVE A BASE DIAMETER OF 0.9" MINIMUM TO 1.4" MAXIMUM, A TOP DIAMETER OF 50% OF THE BASE DIAMETER MINIMUM TO 65% OF THE BASE DIAMETER MAXIMUM AND A HEIGHT OF 0.2".
   D. TRUNCATED DOMES IN A DETECTABLE WARNING SURFACE SHALL HAVE A CENTER-TO-CENTER SPACING OF 1.6" MINIMUM AND 2.4" MAXIMUM, AND A BASE-TO-BASE SPACING OF 0.65" MINIMUM, MEASURED BETWEEN THE MOST ADJACENT DOMES ON SQUARE GRID.
   E. THE DETECTABLE WARNING SURFACE SHALL BE LOCATED SO THAT THE EDGE NEAREST THE CURB LINE IS 6" MINIMUM AND 8" MAXIMUM FROM THE CURB LINE.

9 C-8.1 DETECTABLE WARNING FIELD

SCALE: 1/2" = 1'

SCHULTZ PARK AND TRANSIENT DOCK

Owner:

CITY OF PADUCAH

JJR landscape architecture planning urban design civil engineering environmental science

JJR, LLC
625 WILLIAMSON STREET,
MADISON, WISCONSIN 53703
608.251.1177 T
608.251.6147 F
www.jjr-us.com

ISSUED FOR	REV	DATE

SEALS AND SIGNATURES

NOT FOR CONSTRUCTION

KEY PLAN

DRAWING TITLE

SITE DETAILS

SCALE 24757.200

PROJECT NUMBER

DRAWING NUMBER C-8.1

FILE:P:\24757\200\CAD\sheet\24757-200-SH-DET.dwg USER:jshopiro DATE:Oct, 08 2009 TIME: 01:22 pm

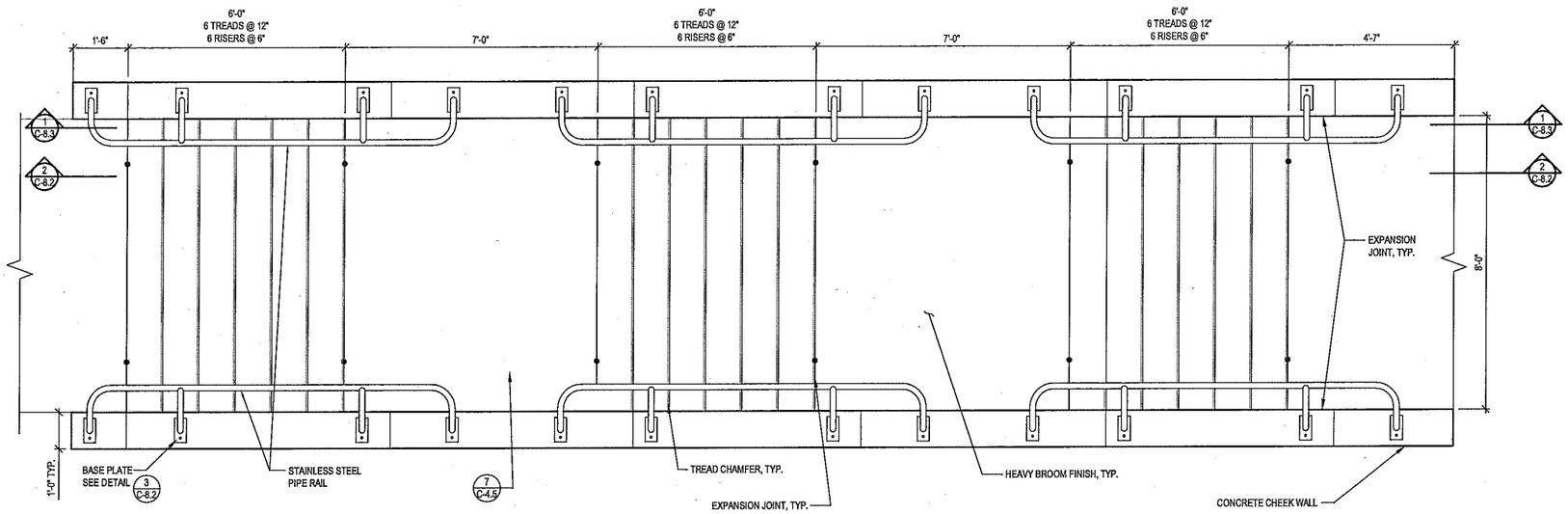

1 C-8.2 UPPER CONCRETE STAIR - PLAN

SCALE: 1/2" = 1'

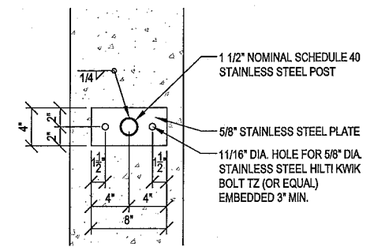

3 C-8.2 BASE PLATE - PLAN

SCALE: 2" = 1'

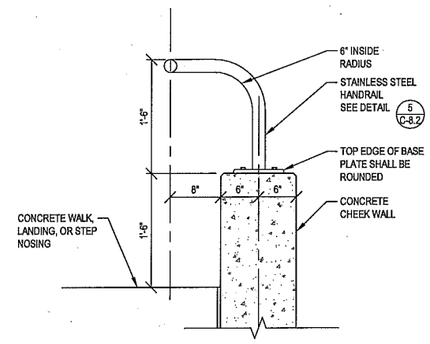

4 C-8.2 HANDRAIL MOUNTING DETAIL - SECTION

SCALE: 1" = 1'

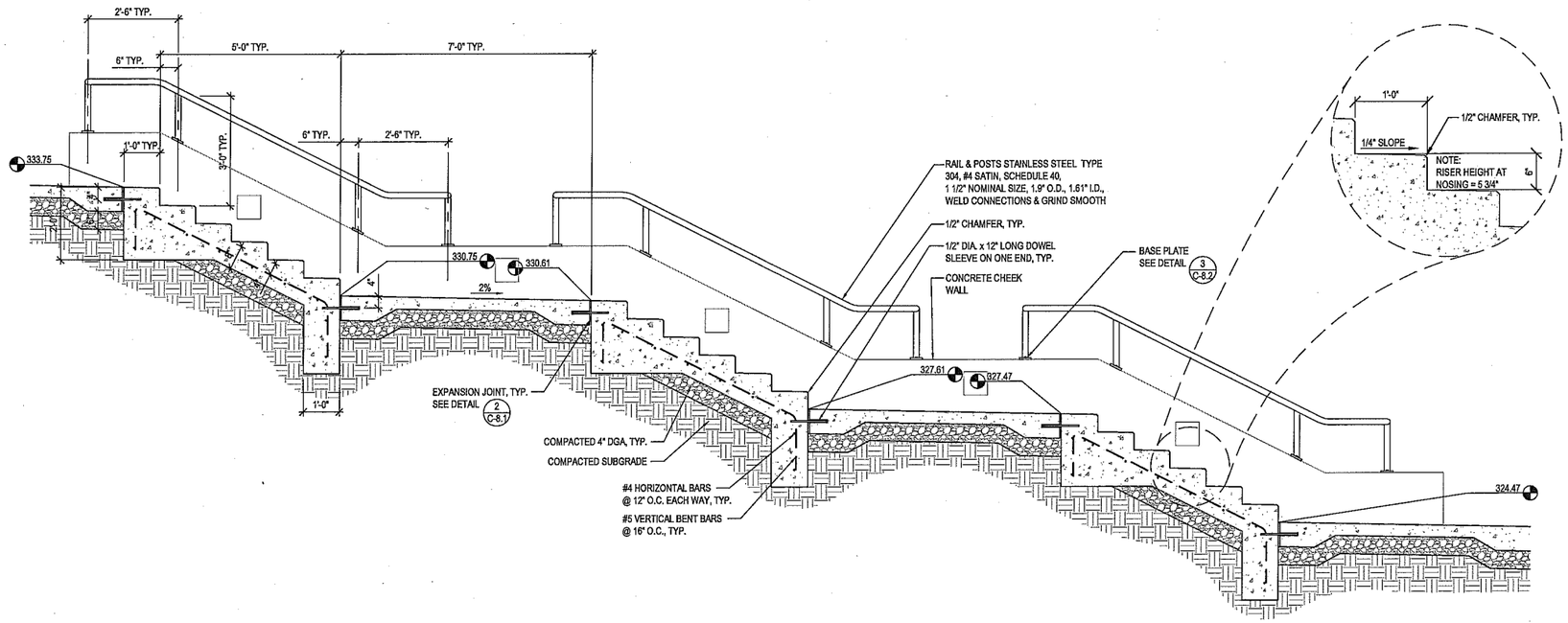

2 C-8.2 UPPER CONCRETE STAIR - SECTION

SCALE: 1/2" = 1'

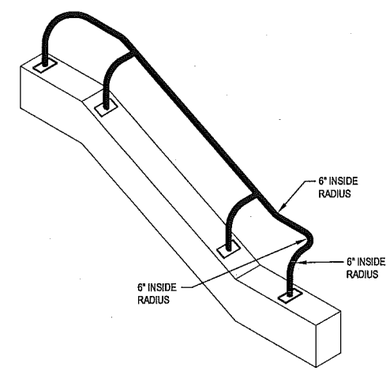

5 C-8.2 HANDRAIL - ISOMETRIC

NOT TO SCALE

SCHULTZ PARK AND TRANSIENT DOCK

Owner:

CITY OF PADUCAH

JJR landscape architecture planning urban design civil engineering environmental science

JJR, LLC
625 WILLIAMSON STREET,
MADISON, WISCONSIN 53703
608.251.1177 T
608.251.6147 F
www.jjr-us.com

ISSUED FOR	REV	DATE

SEALS AND SIGNATURES

NOT FOR CONSTRUCTION

KEY PLAN

DRAWING TITLE

UPPER STAIR DETAILS

SCALE 24757.200

PROJECT NUMBER

C-8.2

DRAWING NUMBER

FILE:P:\24757\200\CAD\arnest\24757-200-SH-DET.dwg USER: jshapiro DATE: Oct. 08 2009 TIME: 01:23 pm

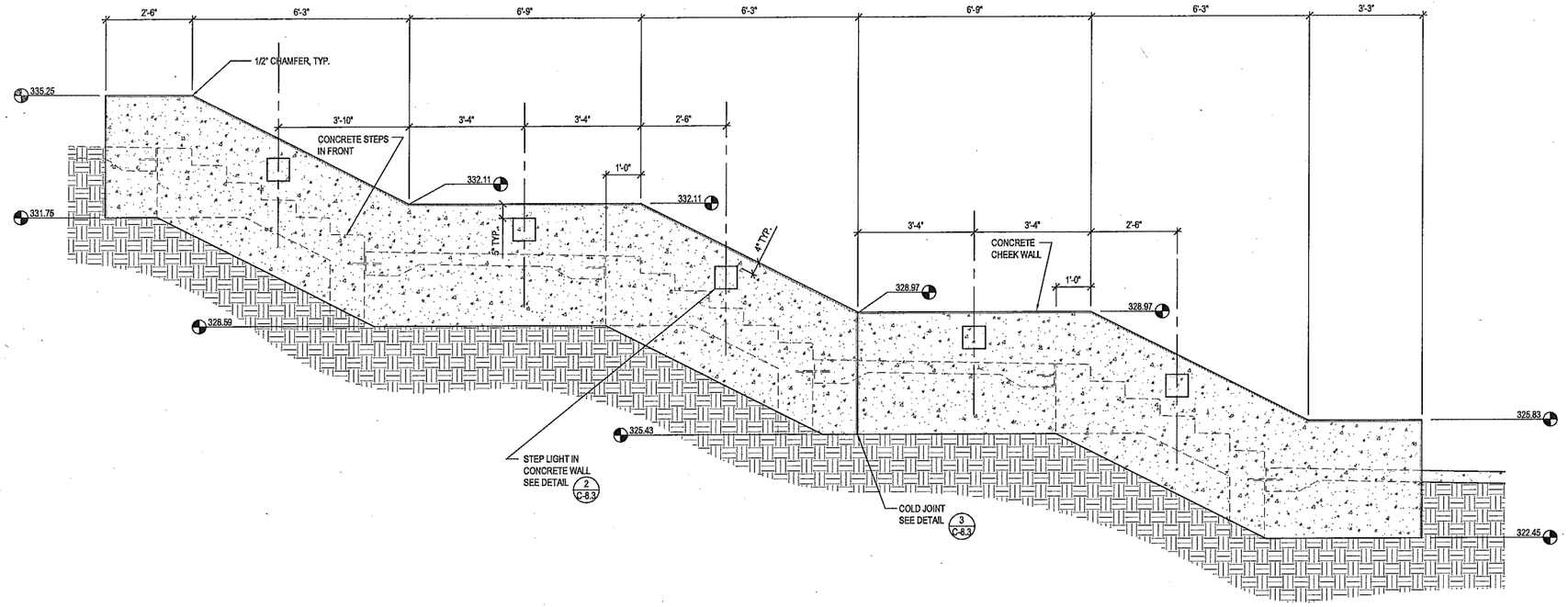

1 C-8.3 UPPER CONCRETE CHEEK WALL -SECTION

SCALE: 1/2" = 1'

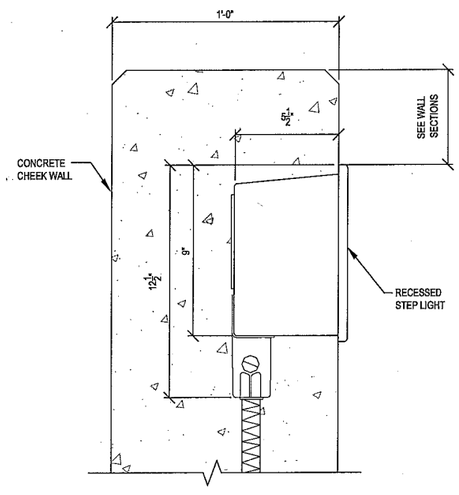

2 C-8.3 WALL MOUNTED LIGHT FIXTURE

SCALE: 3" = 1'

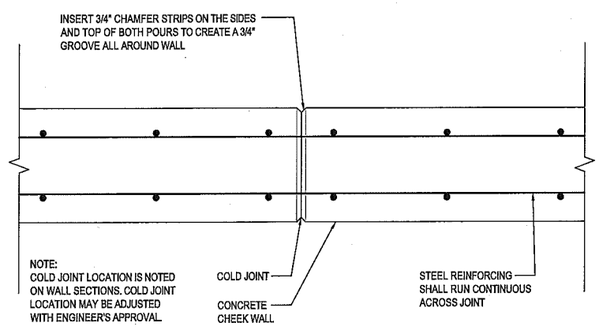

3 C-8.3 WALL CONSTRUCTION JOINT

SCALE: 1 1/2" = 1'

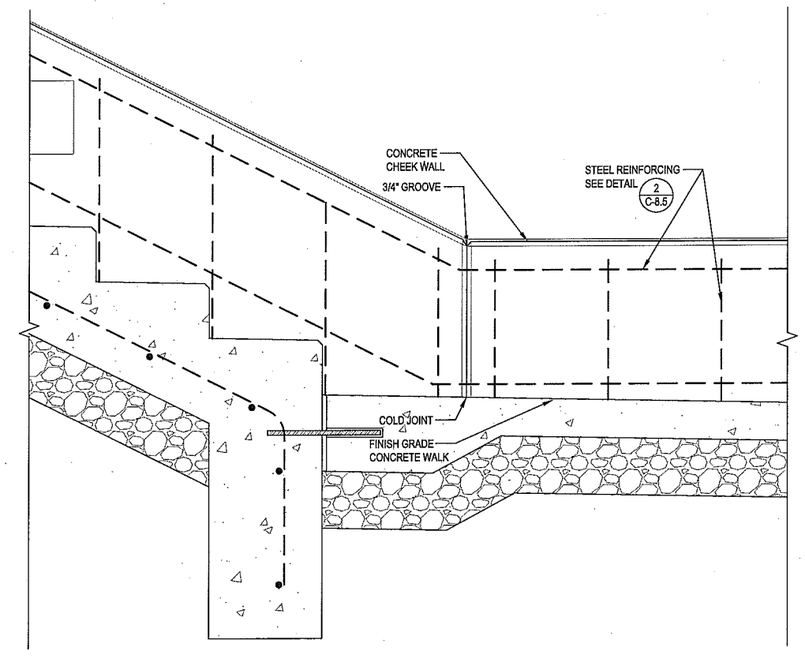

SCHULTZ PARK AND TRANSIENT DOCK

Owner:

CITY OF PADUCAH

JJR landscape architecture planning urban design civil engineering environmental science

JJR, LLC
625 WILLIAMSON STREET,
MADISON, WISCONSIN 53703
608.251.1177 T
608.251.6147 F
www.jjr-us.com

ISSUED FOR	REV	DATE

SEALS AND SIGNATURES

NOT FOR CONSTRUCTION

KEY PLAN

DRAWING TITLE

UPPER STAIR DETAILS

SCALE

PROJECT NUMBER 24757.200

DRAWING NUMBER C-8.3

FILE:P:\24757\200\CAD\sheet\24757-200-SH-DET.dwg USER:jshapiro DATE:Oct. 08 2009 TIME: 01:23 pm

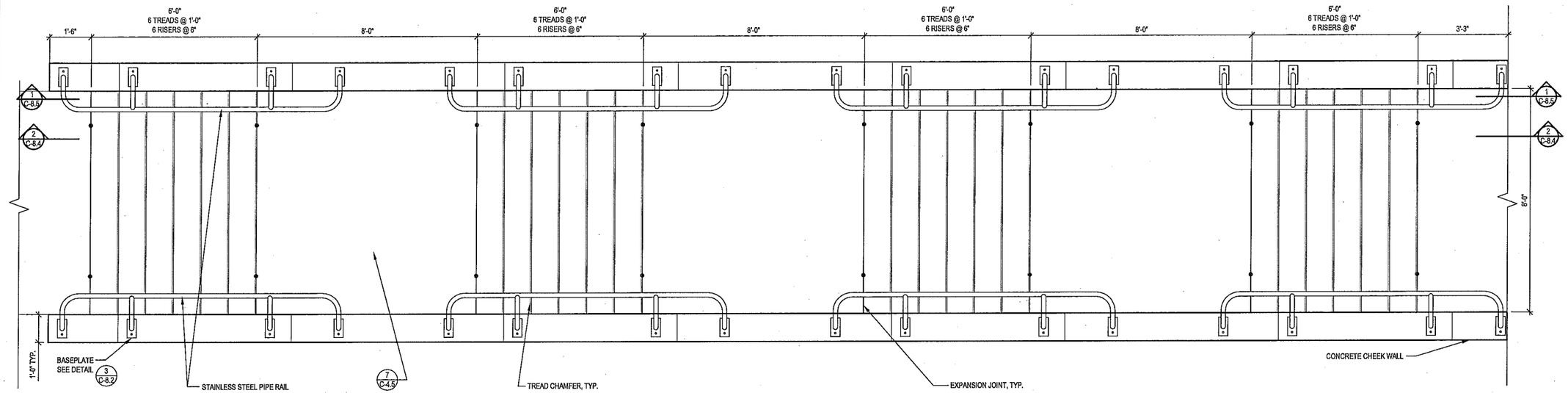

1 C-8.4 LOWER CONCRETE STAIR - PLAN

SCALE: 1/2" = 1'

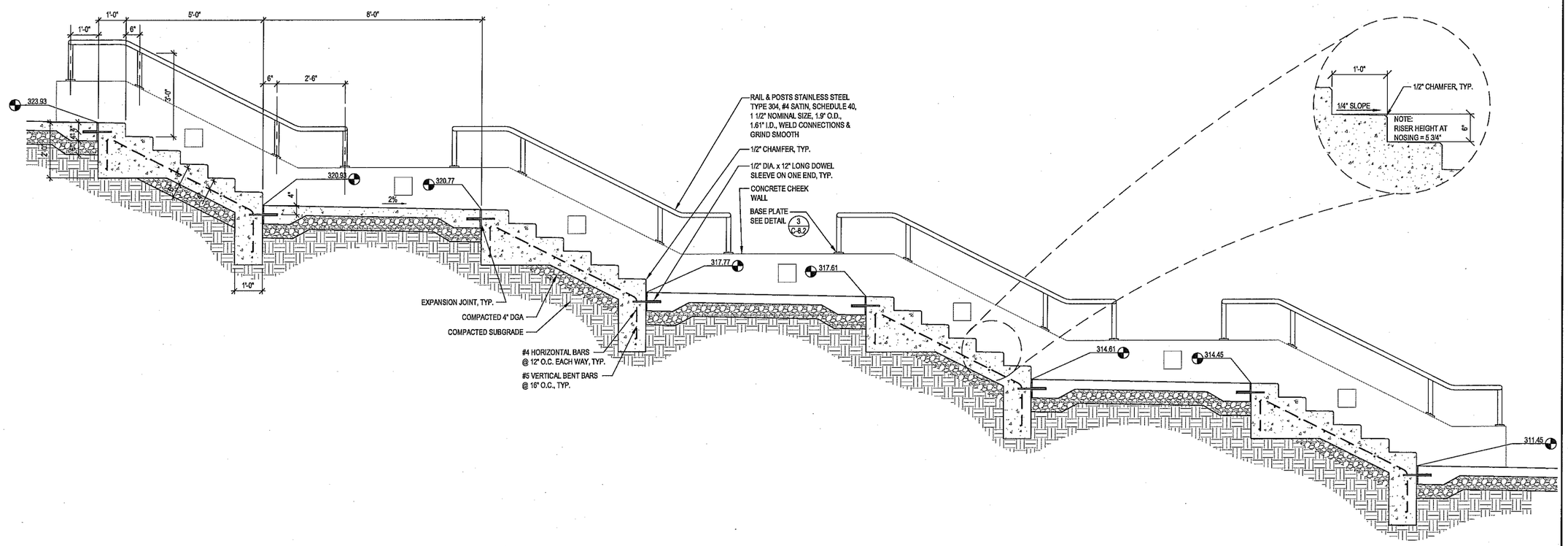

2 C-8.4 LOWER CONCRETE STAIR - SECTION

SCALE: 1/2" = 1'

SCHULTZ PARK AND TRANSIENT DOCK

Owner:

CITY OF PADUCAH

JJR landscape architecture planning urban design civil engineering environmental science

JJR, LLC
625 WILLIAMSON STREET,
MADISON, WISCONSIN 53703
608.251.1177 T
608.251.6147 F
www.jjr-us.com

ISSUED FOR	REV	DATE

SEALS AND SIGNATURES

NOT FOR CONSTRUCTION

KEY PLAN

DRAWING TITLE

LOWER STAIR DETAILS

SCALE 24757.200

PROJECT NUMBER

DRAWING NUMBER C-8.4

FILE:P:\24757\200\CAD\sheet\24757-200-SH-DET.dwg USER:jshapiro DATE:Oct, 08 2009 TIME: 01:23 pm

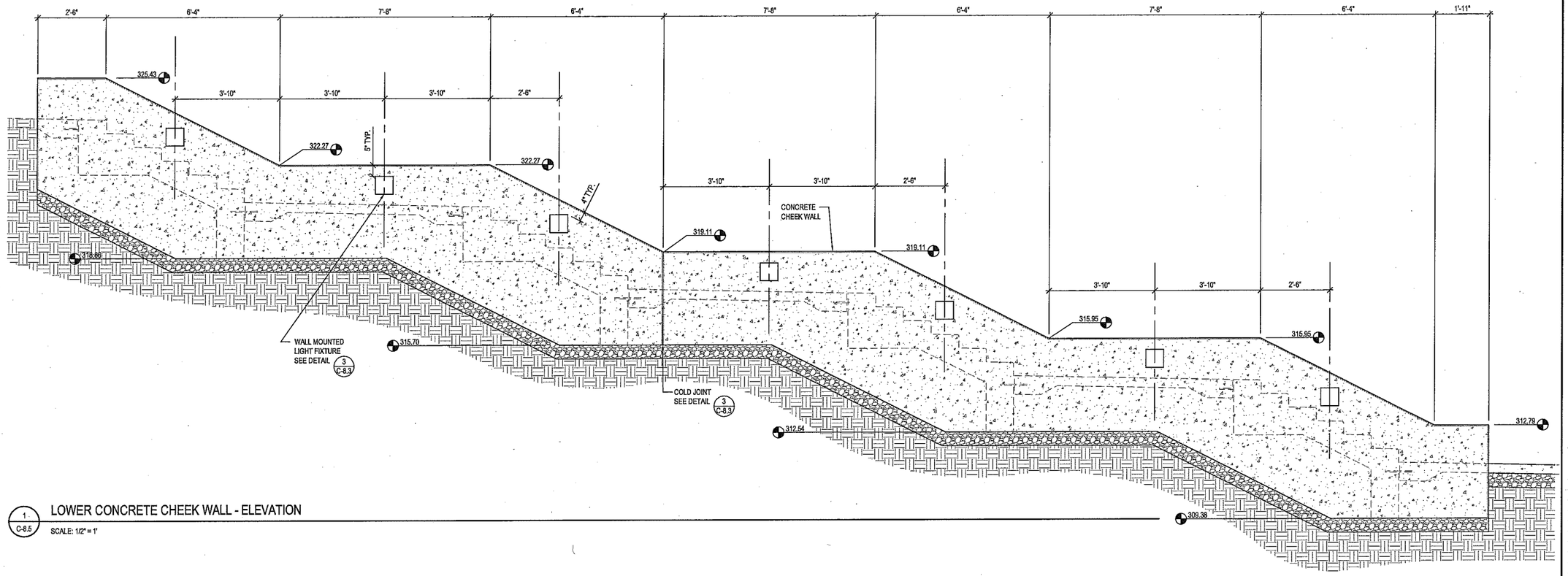

1 C-8.5 LOWER CONCRETE CHEEK WALL - ELEVATION

SCALE: 1/2" = 1'

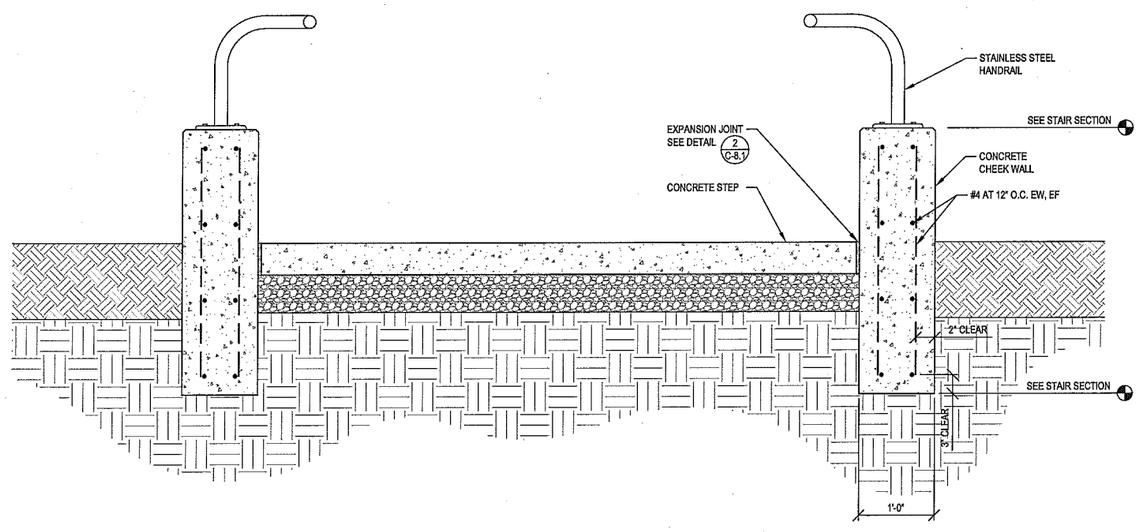

2 C-8.5 TYPICAL CONCRETE CHEEK WALL - SECTION

SCALE: 1" = 1'

SCHULTZ PARK AND TRANSIENT DOCK

Owner:

CITY OF PADUCAH

JJR landscape architecture planning urban design civil engineering environmental science

JJR, LLC
625 WILLIAMSON STREET,
MADISON, WISCONSIN 53703
608.251.1177 T
608.251.6147 F
www.jjr-us.com

ISSUED FOR	REV	DATE

SEALS AND SIGNATURES

NOT FOR CONSTRUCTION

KEY PLAN

DRAWING TITLE

LOWER STAIR DETAILS

SCALE 24757.200

PROJECT NUMBER

C-8.5

DRAWING NUMBER

FILE:P:\24757\200\CAD\sheet\24757-200-SH-DET.dwg USER: jshopiro DATE: Oct. 08 2009 TIME: 01:23 pm

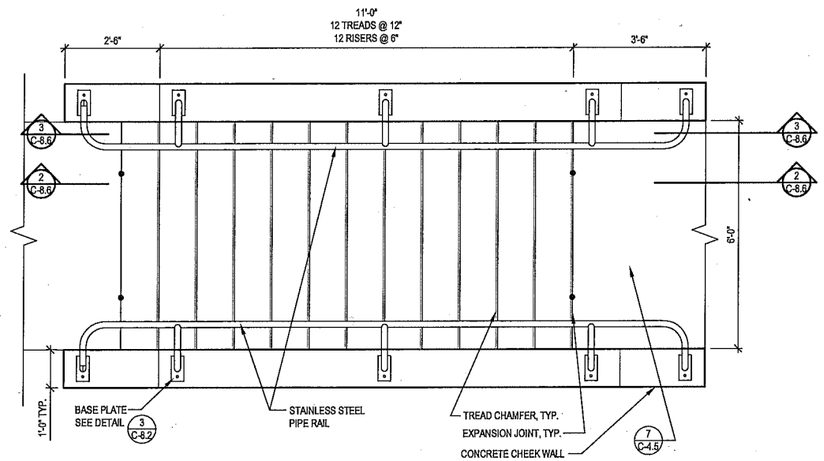

1 C-8.6 NORTHWEST CONCRETE STAIR - PLAN

SCALE: 1/2" = 1'

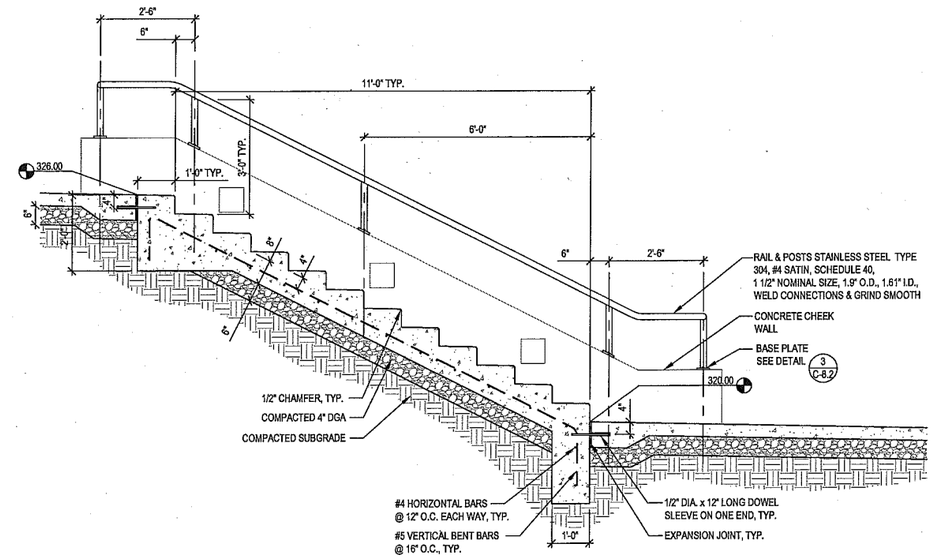

2 C-8.6 NORTHWEST CONCRETE STAIR - SECTION

SCALE: 1/2" = 1'

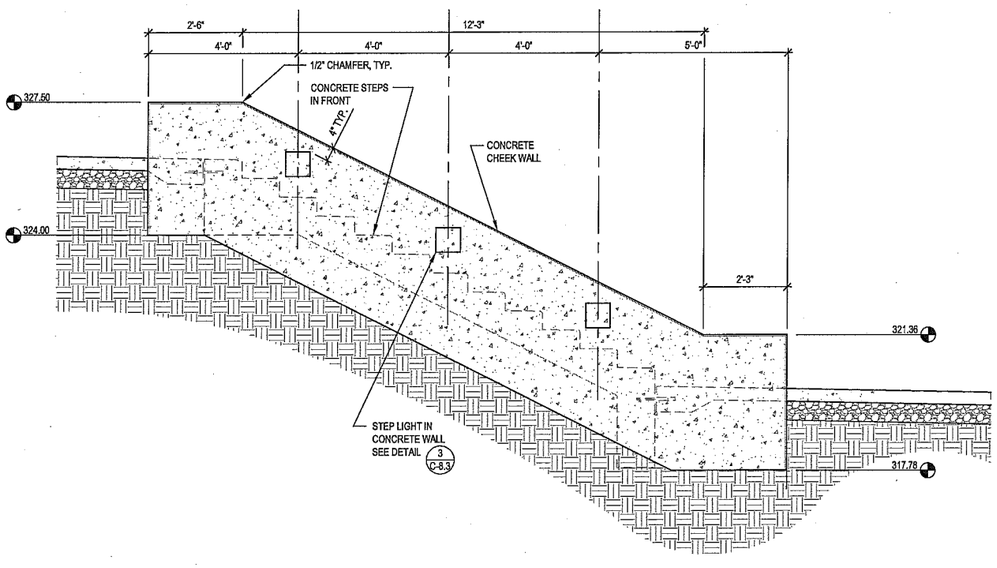

2 C-8.6 NORTHWEST CONCRETE CHEEK WALL - SECTION

SCALE: 1/2" = 1'

SCHULTZ PARK AND TRANSIENT DOCK

Owner:

CITY OF PADUCAH

JJR landscape architecture planning urban design civil engineering environmental science

JJR, LLC
625 WILLIAMSON STREET,
MADISON, WISCONSIN 53703
608.251.1177 T
608.251.6147 F
www.jjr-us.com

ISSUED FOR	REV	DATE

SEALS AND SIGNATURES

NOT FOR CONSTRUCTION

KEY PLAN

DRAWING TITLE

NORTHWEST STAIR DETAILS

SCALE 24757.200

PROJECT NUMBER

C-8.6

DRAWING NUMBER

FILE:P:\24757\200\CAD\sheet\24757-200-SH-DET.dwg USER: jphopko DATE: Oct. 08 2009 TIME: 01:23 pm

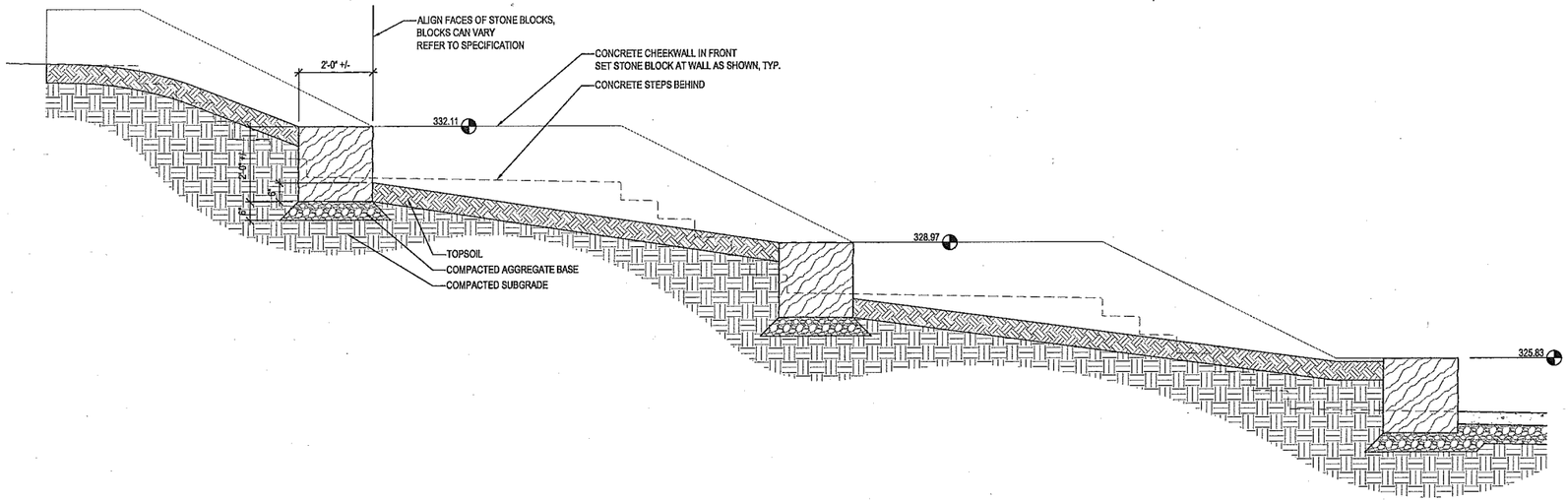

1 C-8.7 STONE SEAT WALL - SECTION

SCALE: 1/2" = 1'

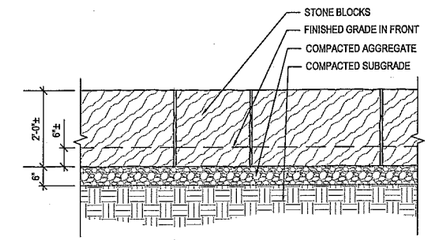

2 C-8.7 STONE SEAT WALL

SCALE: 1/2" = 1'

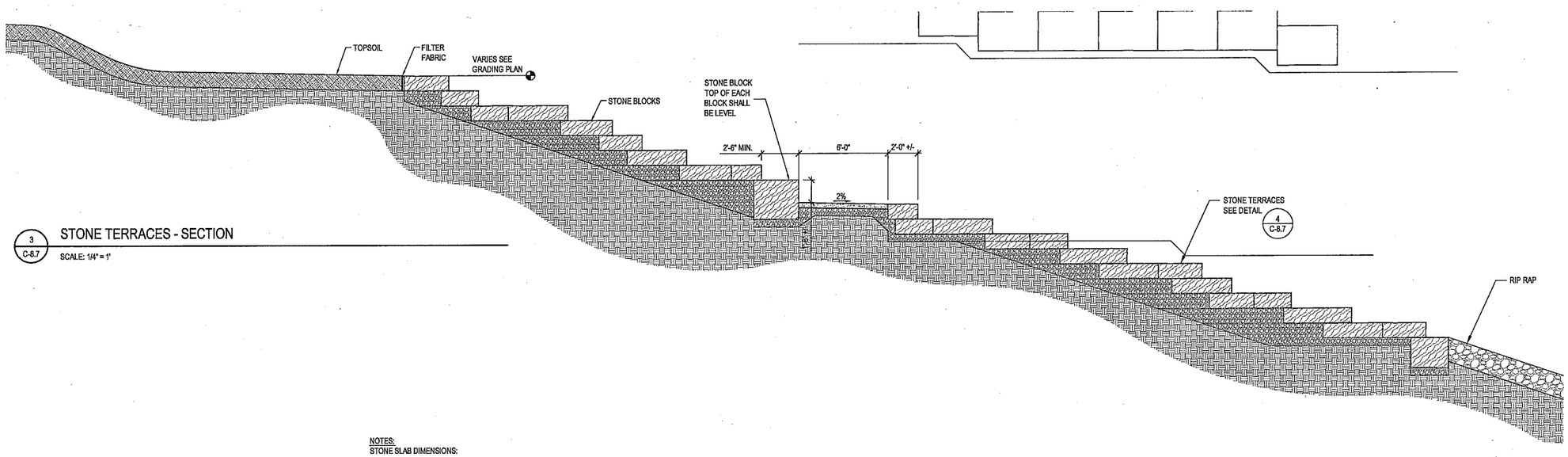

3 C-8.7 STONE TERRACES - SECTION

SCALE: 1/4" = 1'

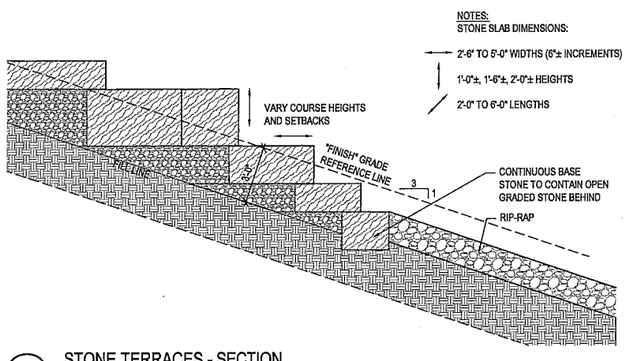

4 C-8.7 STONE TERRACES - SECTION

SCALE: 1/4" = 1'

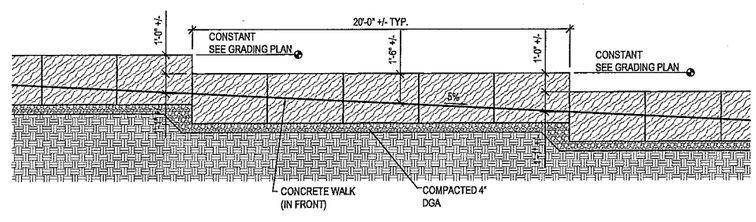

5 C-8.7 STONE TERRACES - SECTION

SCALE: 1/4" = 1'

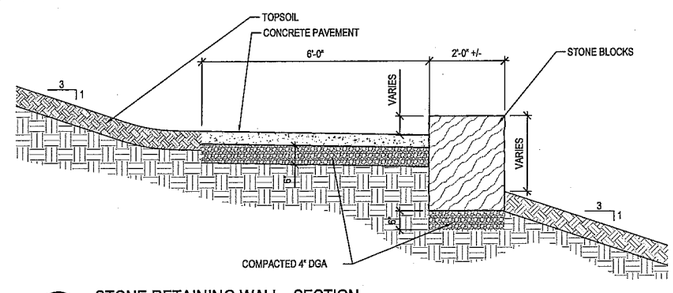

6 C-8.7 STONE RETAINING WALL - SECTION

SCALE: 1/2" = 1'

SCALE: 1/2" = 1'

SCHULTZ PARK AND TRANSIENT DOCK

Owner:

CITY OF PADUCAH

JJR landscape architecture planning urban design civil engineering environmental science

JJR, LLC
625 WILLIAMSON STREET,
MADISON, WISCONSIN 53703
608.251.1177 T
608.251.6147 F
www.jjr-us.com

ISSUED FOR	REV	DATE

SEALS AND SIGNATURES

NOT FOR CONSTRUCTION

KEY PLAN

DRAWING TITLE

DETAILS

SCALE 24757.200

PROJECT NUMBER

C-8.7

DRAWING NUMBER

FILE:P:\24757\200\CAD\sheet\24757-200-SH-DET.dwg USER: pkrapfio DATE:Oct. 08 2009 TIME: 01:23 pm

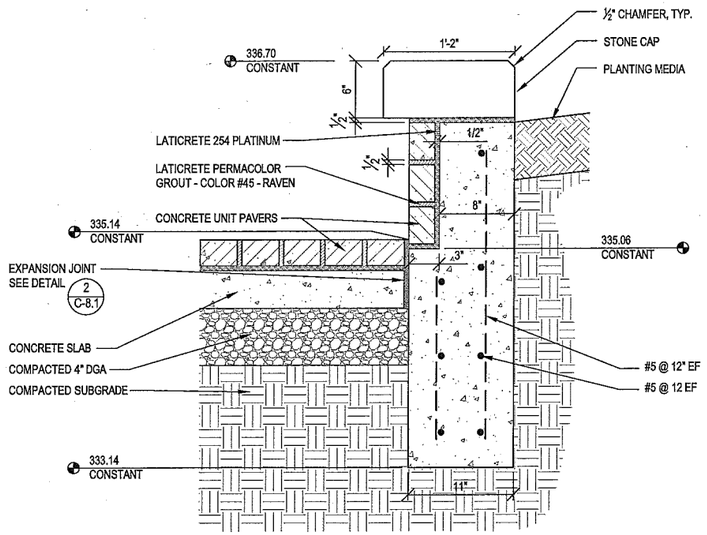

1 C-8.8 PLANTER WALL - SECTION

SCALE: 1 1/2" = 1'

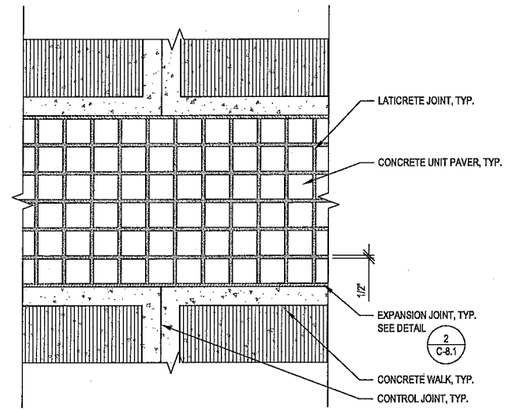

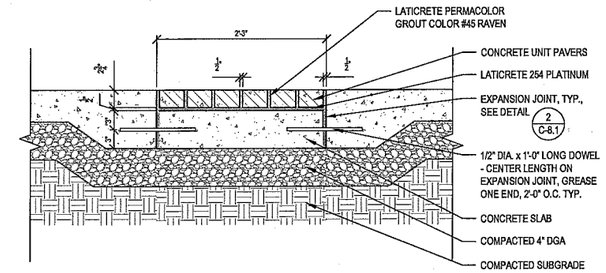

2 C-8.8 TYPICAL CONCRETE UNIT PAVER BAND

SCALE: 1" = 1'

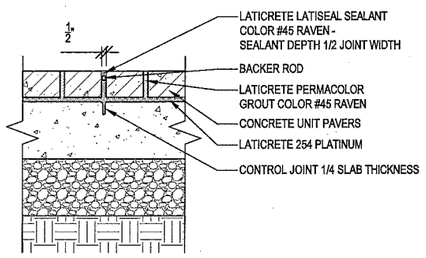

3 C-8.8 TYPICAL CONTROL JOINT IN PAVERS - SECTION

SCALE: 1 1/2" = 1'

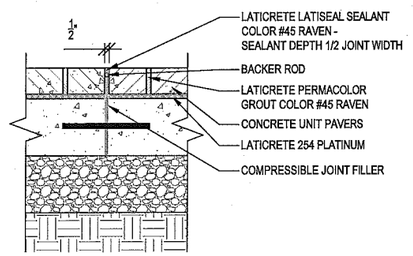

4 C-8.8 TYPICAL EXPANSION JOINT IN PAVERS - SECTION

SCALE: 1 1/2" = 1'

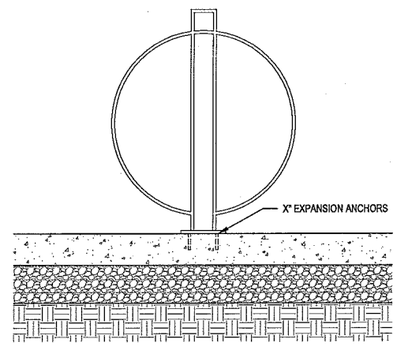

5 C-8.8 TYPICAL BIKE RACK - SECTION

SCALE: 1 1/2" = 1'

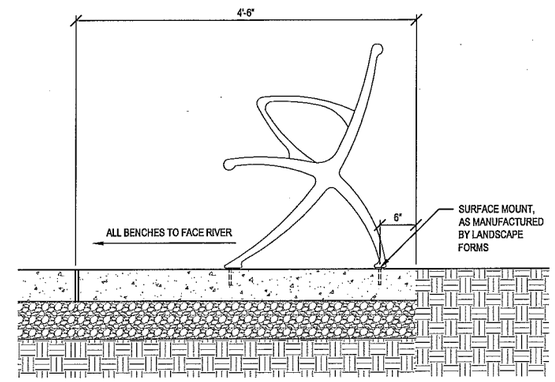

6 C-8.8 TYPICAL BENCH - SECTION

SCALE: 1 1/2" = 1'

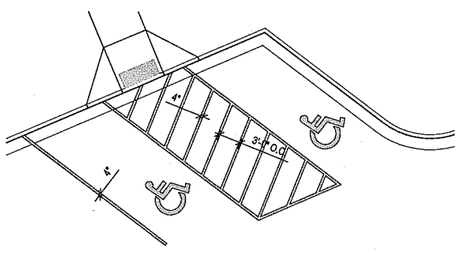

7 C-8.8 TYPICAL HANDICAP STALL PAVEMENT MARKING - PLAN

SCALE: 1" = 10'

SCHULTZ PARK AND TRANSIENT DOCK

Owner:

CITY OF PADUCAH

JJR landscape architecture planning urban design civil engineering environmental science

JJR, LLC
625 WILLIAMSON STREET,
MADISON, WISCONSIN 53703
608.251.1177 T
608.251.6147 F
www.jjr-us.com

ISSUED FOR	REV	DATE

SEALS AND SIGNATURES

NOT FOR CONSTRUCTION

KEY PLAN

DRAWING TITLE

DETAILS

SCALE 24757.200

PROJECT NUMBER

C-8.8

DRAWING NUMBER

FILE:P:\24757\200\CAD\sheet\24757-200-SH-DET.dwg USER:jshapiro DATE:Oct. 08 2009 TIME: 01:23 pm

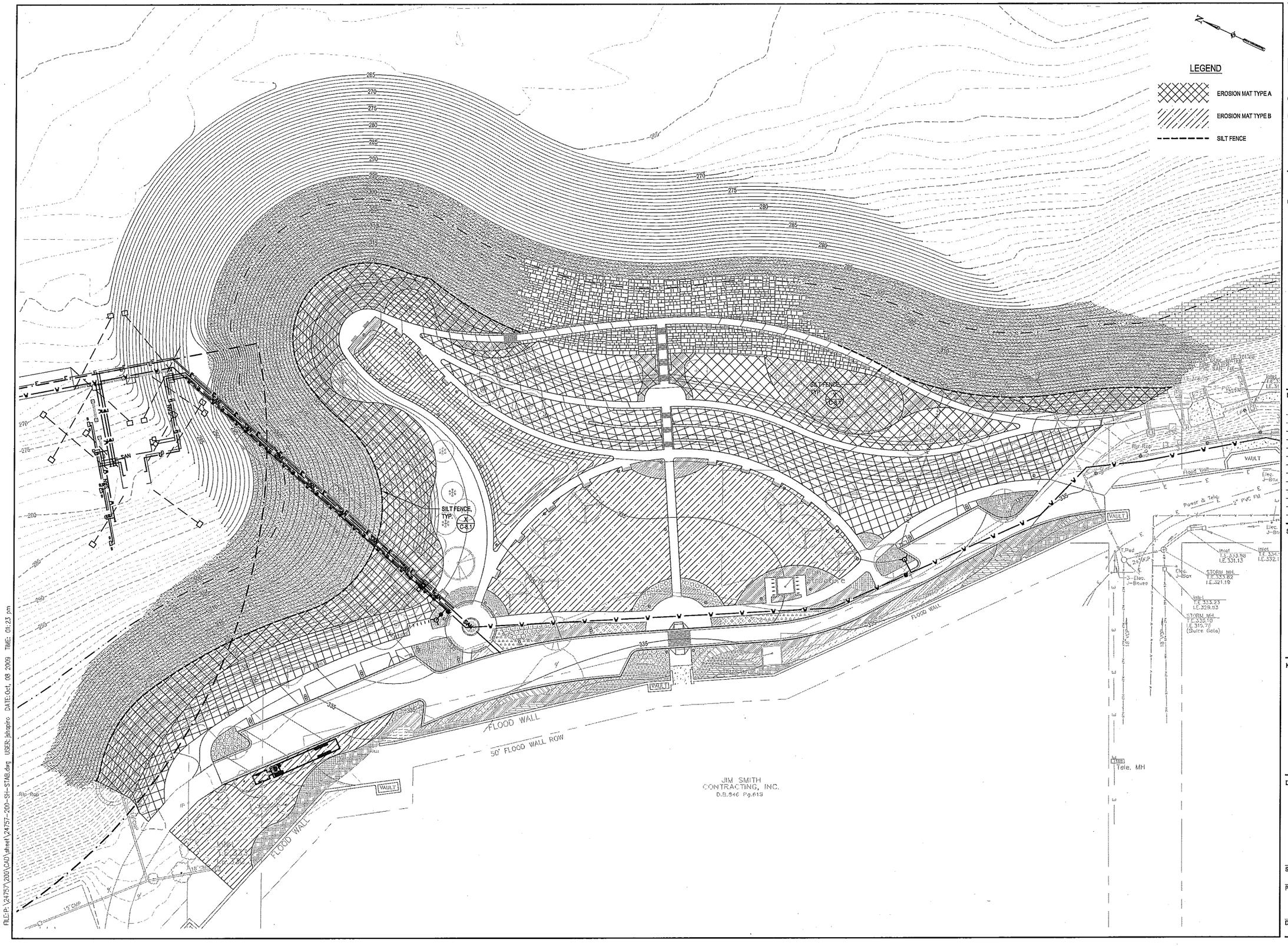

SCHULTZ PARK AND TRANSIENT DOCK

Owner:

CITY OF PADUCAH

JJR
landscape architecture
planning
urban design
civil engineering
environmental science

JJR, LLC
625 WILLIAMSON STREET,
MADISON, WISCONSIN 53703
608.251.1177 T
608.251.6147 F
www.jjr-us.com

ISSUED FOR	REV	DATE

SEALS AND SIGNATURES

NOT FOR CONSTRUCTION

KEY PLAN

DRAWING TITLE

STABILIZATION PLAN

0 20' 40' 80'
SCALE IN FEET

SCALE

24757.200

PROJECT NUMBER

C-9.1

DRAWING NUMBER

FILE:P:\24757\200\CAD\jstreet\24757-200-SH-STAB.dwg USER: jstreet DATE: Oct, 08 2009 TIME: 01:23 pm

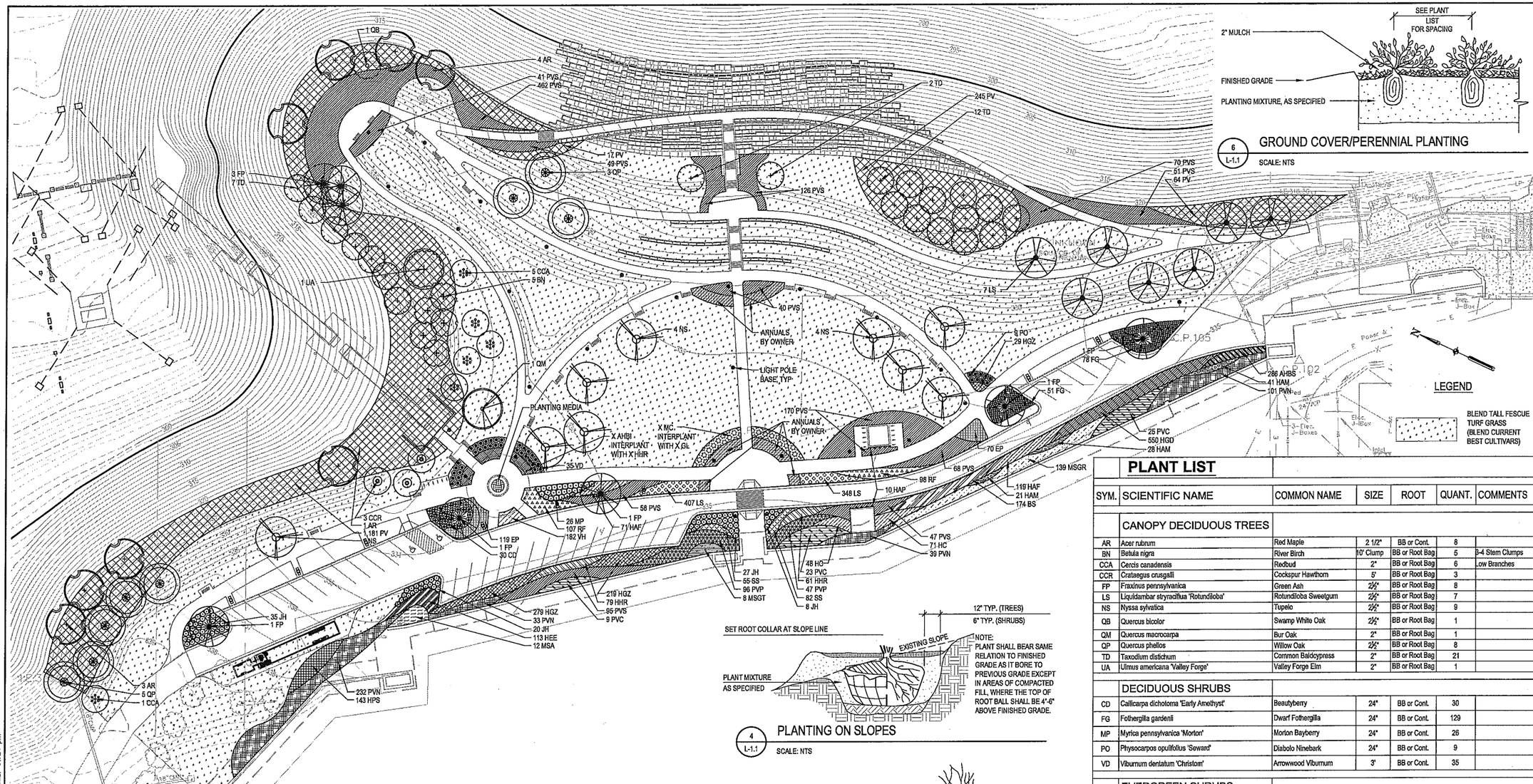

1 / L-1.1 PLANTING PLAN

PLAN SCALE: 1"=40'

6 / L-1.1 GROUND COVER/PERENNIAL PLANTING

SCALE: NTS

4 / L-1.1 PLANTING ON SLOPES

SCALE: NTS

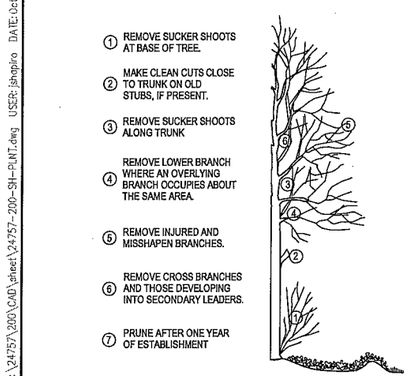

2 / L-1.1 TREE PRUNING DETAIL

SCALE: NTS

NOTES:

1. PLANT EACH SHRUB SUCH THAT THE STEM FLARE IS VISIBLE AT THE TOP OF THE ROOT BALL. DO NOT COVER THE TOP OF THE ROOT BALL WITH SOIL.
2. IF PLANT IS SHIPPED WITH A WIRE BASKET AROUND THE ROOT BALL, CUT THE WIRE BASKET IN FOUR PLACES AND FOLD DOWN INTO PLANTING HOLE, EXPOSING TOP HALF OF BALL. REMOVE TWINE, ROPE, AND BURLAP FROM TOP HALF OF BALL.
3. DO NOT PLACE MULCH IN CONTACT WITH STEMS.

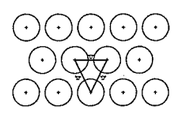

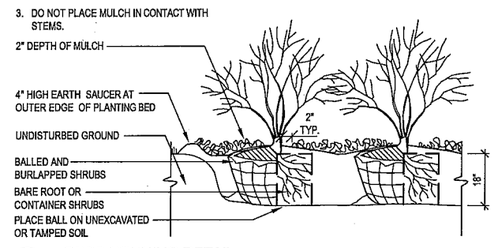

3 / L-1.1 TREE PRUNING DETAIL

SCALE: NTS

NOTES:

1. PLANT EACH TREE SUCH THAT THE TRUNK FLARE IS VISIBLE AT THE TOP OF THE ROOT BALL. DO NOT COVER THE TOP OF THE ROOT BALL WITH SOIL.
2. IF PLANT IS SHIPPED WITH A WIRE BASKET AROUND THE ROOT BALL, CUT THE WIRE BASKET IN FOUR PLACES AND FOLD DOWN INTO PLANTING HOLE EXPOSING TOP HALF OF BALL. REMOVE TWINE, ROPE, AND BURLAP FROM TOP HALF OF BALL.
3. DO NOT PLACE MULCH IN CONTACT WITH TREE TRUNK.

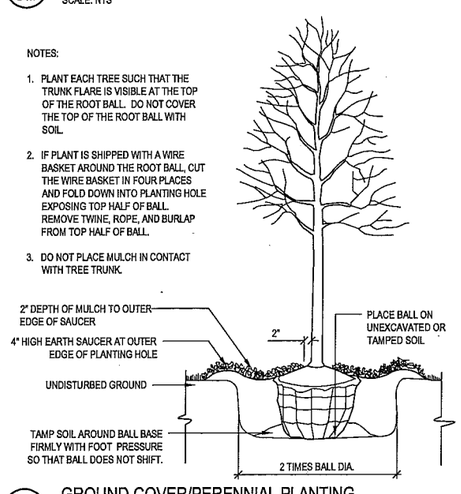

5 / L-1.1 GROUND COVER/PERENNIAL PLANTING

SCALE: NTS

PLANT LIST

SYM.	SCIENTIFIC NAME	COMMON NAME	SIZE	ROOT	QUANT.	COMMENTS
	CANOPY DECIDUOUS TREES					
AR	Acer rubrum	Red Maple	2 1/2"	BB or Cont.	8	
BN	Betula nigra	River Birch	10' Clump	BB or Root Bag	5	3-4 Stem Clumps
CCA	Cercis canadensis	Redbud	2"	BB or Root Bag	6	Low Branches
CCR	Crataegus crusgalli	Cockspur Hawthorn	5'	BB or Root Bag	3	
FP	Fraxinus pennsylvanica	Green Ash	2½"	BB or Root Bag	8	
LS	Liquidambar stryraciflua 'Rotundiloba'	Rotundiloba Sweetgum	2½"	BB or Root Bag	7	
NS	Nyssa sylvatica	Tupelo	2½"	BB or Root Bag	9	
QB	Quercus bicolor	Swamp White Oak	2½"	BB or Root Bag	1	
QM	Quercus macrocarpa	Bur Oak	2"	BB or Root Bag	1	
QP	Quercus phellos	Willow Oak	2½"	BB or Root Bag	8	
TD	Taxodium distichum	Common Baldcypress	2"	BB or Root Bag	21	
UA	Ulmus americana 'Valley Forge'	Valley Forge Elm	2"	BB or Root Bag	1	
	DECIDUOUS SHRUBS					
CD	Callicarpa dichotoma 'Early Amethyst'	Beautyberry	24"	BB or Cont.	30	
FG	Fothergilla gardenii	Dwarf Fothergilla	24"	BB or Cont.	129	
MP	Myrica pennsylvanica 'Morton'	Morton Bayberry	24"	BB or Cont.	26	
PO	Physocarpos opulifolius 'Seward'	Diabolo Ninebark	24"	BB or Cont.	9	
VD	Viburnum dentatum 'Christom'	Arrowwood Viburnum	3'	BB or Cont.	35	
	EVERGREEN SHRUBS					
JH	Juniperus horizontalis 'Blue Chip'	Blue Chip Juniper	#5	Cont.	90	
	GROUNDCOVERS AND PERENNIALS					
AHBI	Amsonia hubrichtii 'Blue Ice'	Blue Ice Amsonia	#1	Cont.	116	24" OC
AHBS	Amsonia hubrichtii 'Blue Star'	Blue Star Amsonia	#1	Cont.	286	12" OC
BS	Baptisia sphaerocarpa	Yellow Baptisia	#1	Cont.	174	24" OC
EP	Echinacea purpurea 'Kim's Knee High'	Kim's Knee High Coneflower	#1	Cont.	189	24" OC
GL	Gaura lindheimeri 'Whirling Butterflies'	Whirling Butterflies 'Gaura'	#1	Cont.	350	18" OC
HAF	Hemerocallis 'August Flame'	August Flame Daylily	#1	Cont.	190	24" OC
HAM	Hemerocallis 'Autumn Minaret'	Autumn Minaret Daylily	#1	Cont.	90	24" OC
HC	Hemerocallis 'Challenger'	Challenger Daylily	#1	Cont.	119	24" OC
HEE	Hemerocallis 'Evening Enchantment'	Evening Enchantment Daylily	#1	Cont.	113	24" OC
HGD	Hemerocallis 'Gold Dust'	Gold Dust Daylily	#1	Cont.	550	18" OC
HGZ	Hemerocallis 'Golden Zebra'	Goldern Zebra Daylily	#1	Cont.	527	18" OC
HHR	Hemerocallis 'Happy Returns'	Happy Returns Daylily	#1	Cont.	256	24" OC
HPS	Hemerocallis 'Pink Super Spider'	Pink Super Spider Daylily	#1	Cont.	143	24" OC
HAP	Hydrangea anomala subsp. petiolaris	Climbing Hydrangea	#5	Cont.	10	See Plan
LS	Liatris spicata	Gayfeather	#1	Cont.	755	12" OC
MSA	Miscanthus sinensis 'Andante'	Eulalia	#1	Cont.	12	60" OC
MSGT	Miscanthus sinensis 'Gilded Tower'	Gilded Tower Maiden Grass	#1	Cont.	8	60" OC
MSGR	Miscanthus sinensis 'Gracillimus'	Maiden Grass	#1	Cont.	139	36" OC
MC	Molinia caerulea 'Moorflamme'	Moor Grass	#1	Cont.	87	36" OC
PV	Panicum virgatum	Switchgrass	#1	Cont.	1,507	60" OC
PVC	Panicum virgatum 'Cloud Nine'	Cloud Nine Switchgrass	#1	Cont.	57	60" OC
PVN	Panicum virgatum 'Northwind'	Northwind Switchgrass	#1	Cont.	405	36" OC
PVP	Panicum virgatum 'Prairie Fire'	Prairie Fire Switchgrass	#1	Cont.	143	36" OC
PVS	Panicum virgatum 'Shenandoah'	Shenandoah Switchgrass	#1	Cont.	1277	36" OC
RF	Rudbeckia fulgida 'Goldsturm'	Black-eyed Susan	#1	Cont.	205	24" OC
SS	Schizachyrium scoparium 'The Blues'	The Blues Little Bluestem	#1	Cont.	137	18" OC
VH	Verbena 'Homestead Purple'	Homestead Purple Verbena	#1	Cont.	182	12" OC

LEGEND

BLEND TALL FESCUE TURF GRASS (BLEND CURRENT BEST CULTIVARS)

SCHULTZ PARK AND TRANSIENT DOCK

Owner:

CITY OF PADUCAH

JJR landscape architecture planning urban design civil engineering environmental science

JJR, LLC
625 WILLIAMSON STREET,
MADISON, WISCONSIN 53703
608.251.1177 T
608.251.6147 F
www.jjr-us.com

ISSUED FOR	REV	DATE

SEALS AND SIGNATURES

NOT FOR CONSTRUCTION

KEY PLAN

DRAWING TITLE

PLANTING PLAN

0 20' 40' 80'
SCALE IN FEET

SCALE 24757.200

PROJECT NUMBER

L-1.1

DRAWING NUMBER

FILE:P:\24757\200\CAD\sheet\24757-200-SHL-PLNT.dwg USER:bhopkins DATE:Oct. 08 2009 TIME: 01:24 pm

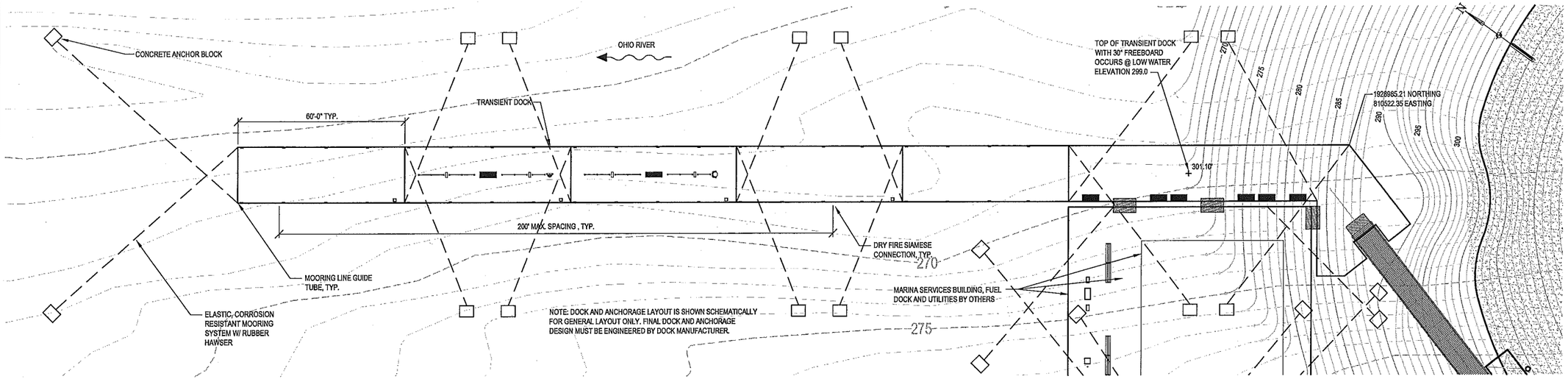

1 / D-1.1 TRANSIENT DOCK/WAVE ATTENUATOR LAYOUT

SCALE: 1" = 20'

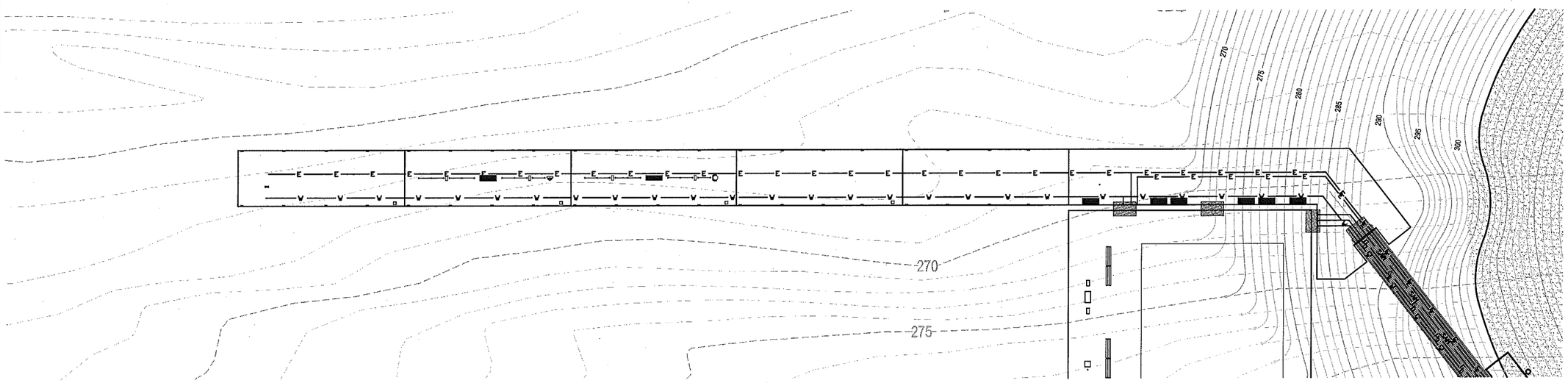

1 / D-1.1 TRANSIENT DOCK/WAVE ATTENUATOR LAYOUT

SCALE: 1" = 20'

SCHULTZ PARK AND TRANSIENT DOCK

Owner:

CITY OF PADUCAH

JJR
landscape architecture
planning
urban design
civil engineering
environmental science

JJR, LLC
625 WILLIAMSON STREET,
MADISON, WISCONSIN 53703
608.251.1177 T
608.251.6147 F
www.jjr-us.com

ISSUED FOR	REV	DATE

SEALS AND SIGNATURES

NOT FOR CONSTRUCTION

KEY PLAN

DRAWING TITLE

TRANSIENT DOCK

SCALE 24757.200

PROJECT NUMBER

D-1.1

DRAWING NUMBER

FILE:P:\24757\200\CAD\sheet\24757-200-SH-LAYO-DOCK.dwg USER: jshapiro DATE: Oct. 08 2009 TIME: 01:24 pm

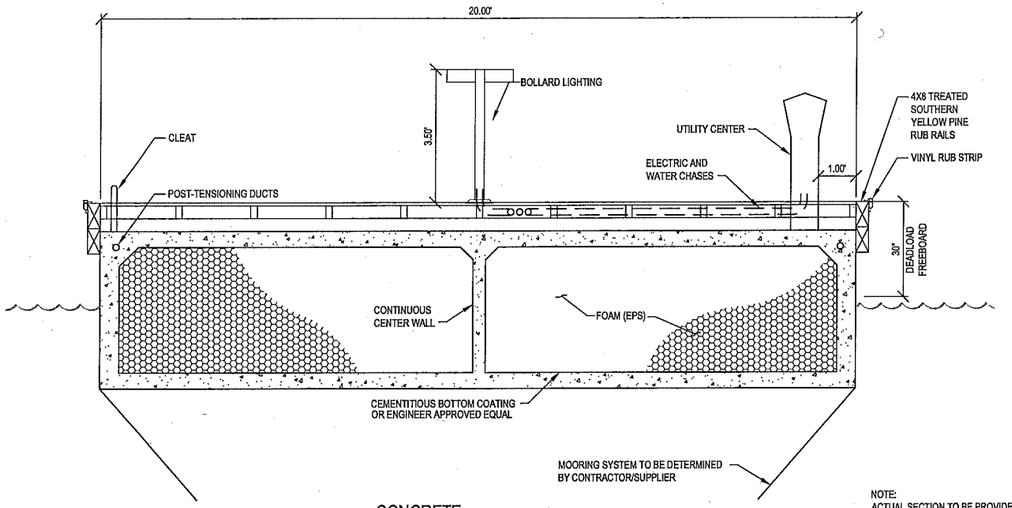

NOTE:
ACTUAL SECTION TO BE PROVIDED BY MANUFACTURER. TYPICAL SECTION FOR GENERAL DIMENSIONS AND LAYOUT ONLY.

1 / D-2.1 TYPICAL DOCK SECTION

SCALE: 1" = 2'

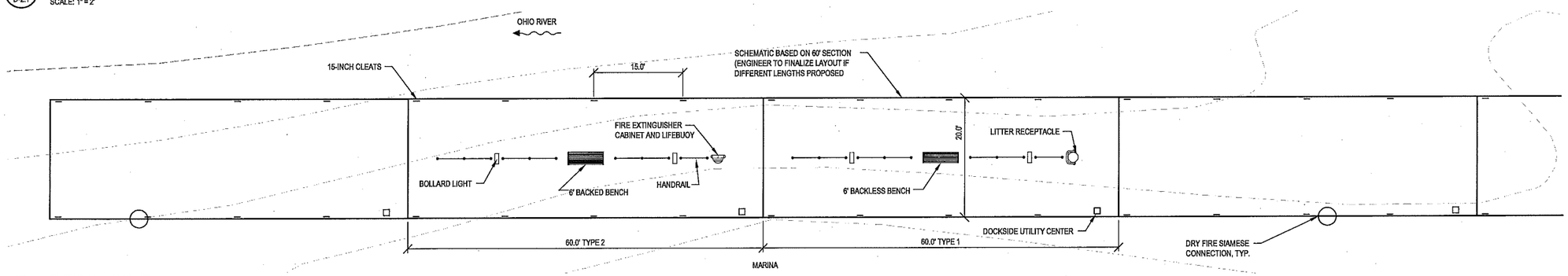

2 / D-2.1 TYPICAL LAYOUT

SCALE: 1" = 10'

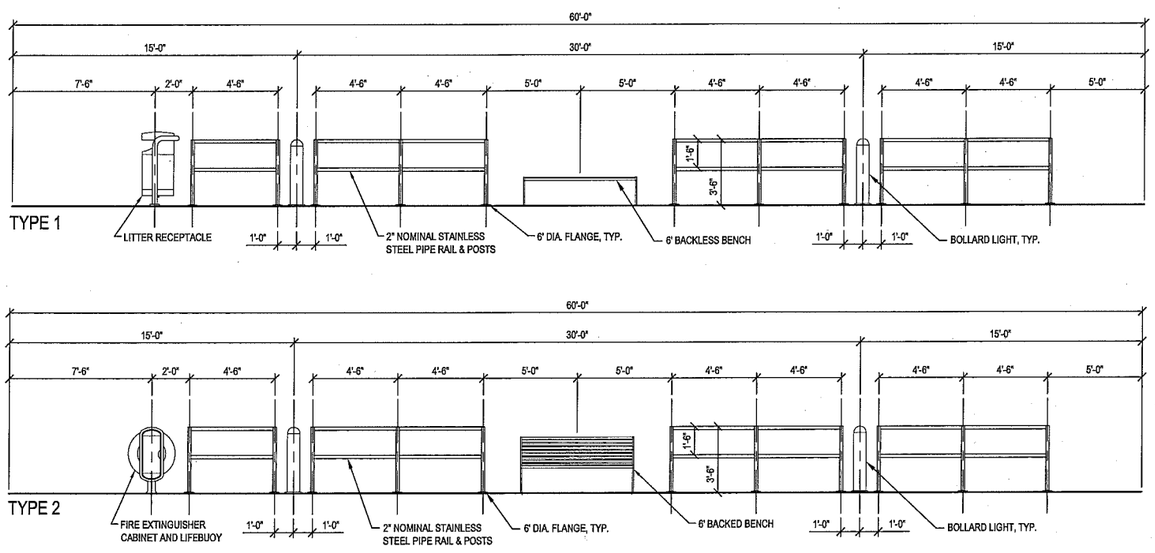

3 / D-2.1 TRANSIENT DOCK ELEVATION

SCALE: 1" = 4'

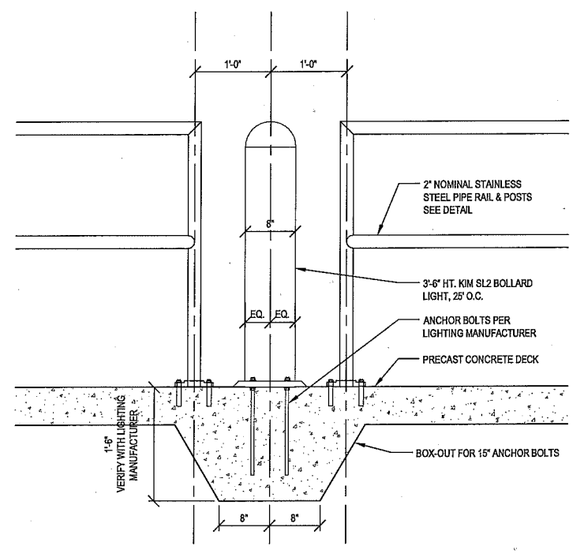

4 / D-2.1 BOLLARD AND RAILING ELEVATION

SCALE: 1" = 1'

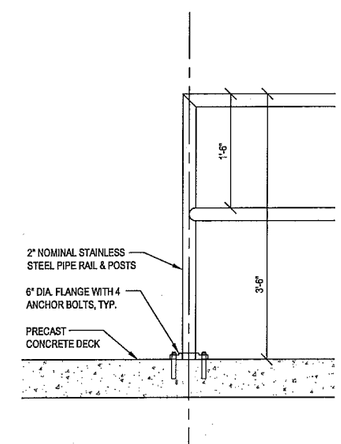

5 / D-2.1 RAILING ELEVATION

SCALE: 1" = 1'

SCHULTZ PARK AND TRANSIENT DOCK

Owner:

CITY OF PADUCAH

JJR
landscape architecture
planning
urban design
civil engineering
environmental science

JJR, LLC
625 WILLIAMSON STREET,
MADISON, WISCONSIN 53703
608.251.1177 T
608.251.6147 F
www.jjr-us.com

ISSUED FOR	REV	DATE

SEALS AND SIGNATURES

NOT FOR CONSTRUCTION

KEY PLAN

DRAWING TITLE

TRANSIENT DOCK DETAILS

SCALE

PROJECT NUMBER 24757.200

DRAWING NUMBER D-2.1

FILE:P:\24757\200\CAD\sheet\24757-200-SH-LAYO-DOCK.dwg USER: jshapiro DATE: Oct. 08 2009 TIME: 01:25 pm

TOLERANCES UNLESS OTHERWISE SPECIFIED

DECIMALS .00=±.010
DECIMALS .000=±.005
FRACTIONS 1/X=±1/32
ANGLES ±1

BREAK ALL SHARP CORNERS W/ 1/32 R UNLESS OTHERWISE SPECIFIED

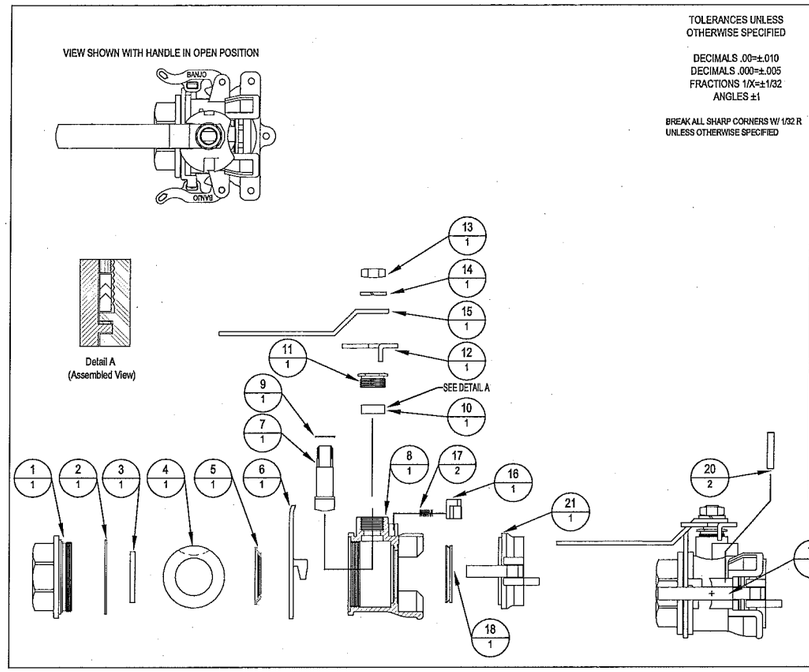

Item	Qty	Part Number	Description
1	1	DM15256FSS	2" NPTF END PLATE
2	1	DM15204SS	BODY GASKET
3	1	V20258	SEAT
4	1	DM15255FSS	BALL
5	1	DB20258	SEAT
6	1	DM15289SS	LOCKING YOKE
7	1	DM15151SS	STEM
8	1	DM15154FSS	VALVE BODY
9	2	VSS15060	THRUST BEARING
10	1	VSS15160	STEM PACKING
11	1	VSS15159	PACKING NUT
12	1	DM15154SS	INTERLOCK CAM
13	1	VSS15020	5/8"-18 JAM NUT
14	1	VSS15021	LOCKWASHER
15	1	DM15153SS	HANDLE
16	1	DM15288FSS	BUTTON
17	2	DB20281	SPRING
18	1	DM20294	FDA VITON SEAL
19	2	DM200KK	CAM ARM
20	2	DB200PSS	PIN
21	1	DM200APL	PLUG
N/S	1	V20207	LANYARD

BANJO LIQUID HANDLING PRODUCTS
BANJO CORPORATION
150 BANJO DR. * CRAWFORDSVILLE, IN 47933
PART NO. DM200ASS | TITLE 2" DRY MATE SS
DWN BDB | DATE 3/2/06 | SCALE
APP. | DATE | SHEET SIZE
DWG NO. | REV
SHEET: OF

1 / D-3.1 BALL VALVE - FEMALE

SCALE: N.T.S.

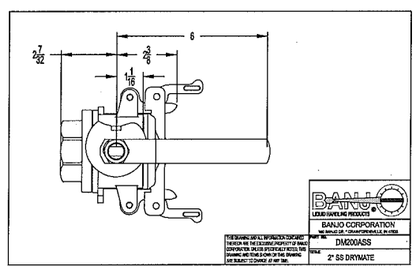

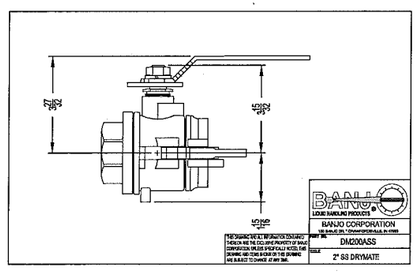

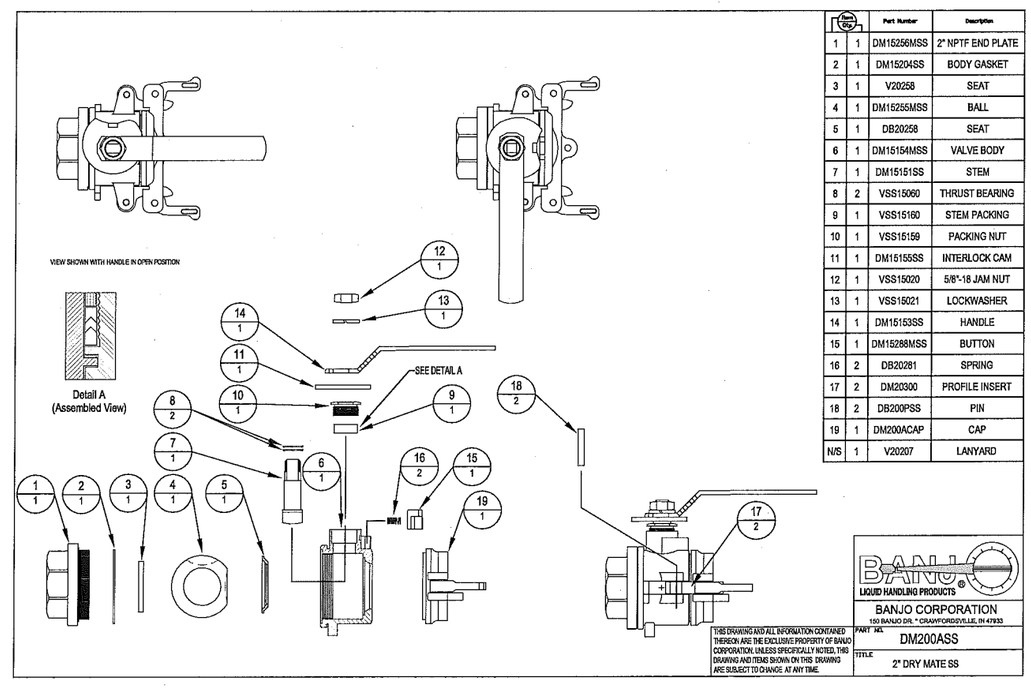

Item	Qty	Part Number	Description
1	1	DM15256MSS	2" NPTF END PLATE
2	1	DM15204SS	BODY GASKET
3	1	V20258	SEAT
4	1	DM15255MSS	BALL
5	1	DB20258	SEAT
6	1	DM15154MSS	VALVE BODY
7	1	DM15151SS	STEM
8	2	VSS15060	THRUST BEARING
9	1	VSS15160	STEM PACKING
10	1	VSS15159	PACKING NUT
11	1	DM15155SS	INTERLOCK CAM
12	1	VSS15020	5/8"-18 JAM NUT
13	1	VSS15021	LOCKWASHER
14	1	DM15153SS	HANDLE
15	1	DM15288MSS	BUTTON
16	2	DB20281	SPRING
17	2	DM20300	PROFILE INSERT
18	2	DB200PSS	PIN
19	1	DM200ACAP	CAP
N/S	1	V20207	LANYARD

THIS DRAWING AND ALL INFORMATION CONTAINED THEREON ARE THE EXCLUSIVE PROPERTY OF BANJO CORPORATION, UNLESS SPECIFICALLY NOTED, THIS DRAWING AND ITEMS SHOWN ON THIS DRAWING ARE SUBJECT TO CHANGE AT ANY TIME.

BANJO LIQUID HANDLING PRODUCTS
BANJO CORPORATION
150 BANJO DR. * CRAWFORDSVILLE, IN 47933
PART NO. DM200ASS
TITLE 2" DRY MATE SS

2 / D-3.1 BALL VALVE - MALE

SCALE: N.T.S.

SCHULTZ PARK AND TRANSIENT DOCK

Owner:

CITY OF PADUCAH

JJR landscape architecture planning urban design civil engineering environmental science
JJR, LLC
625 WILLIAMSON STREET,
MADISON, WISCONSIN 53703
608.251.1177 T
608.251.6147 F
www.jjr-us.com

ISSUED FOR	REV	DATE

SEALS AND SIGNATURES

NOT FOR CONSTRUCTION

KEY PLAN

DRAWING TITLE

TRANSIENT DOCK DETAILS

SCALE 24757.200

PROJECT NUMBER

D-3.1

DRAWING NUMBER

FILE:P:\24757\200\CAD\jtest\24757-200-SH-LAYO-DOCK.dwg USER: jhopiro DATE: Oct. 06 2009 TIME: 01:25 pm

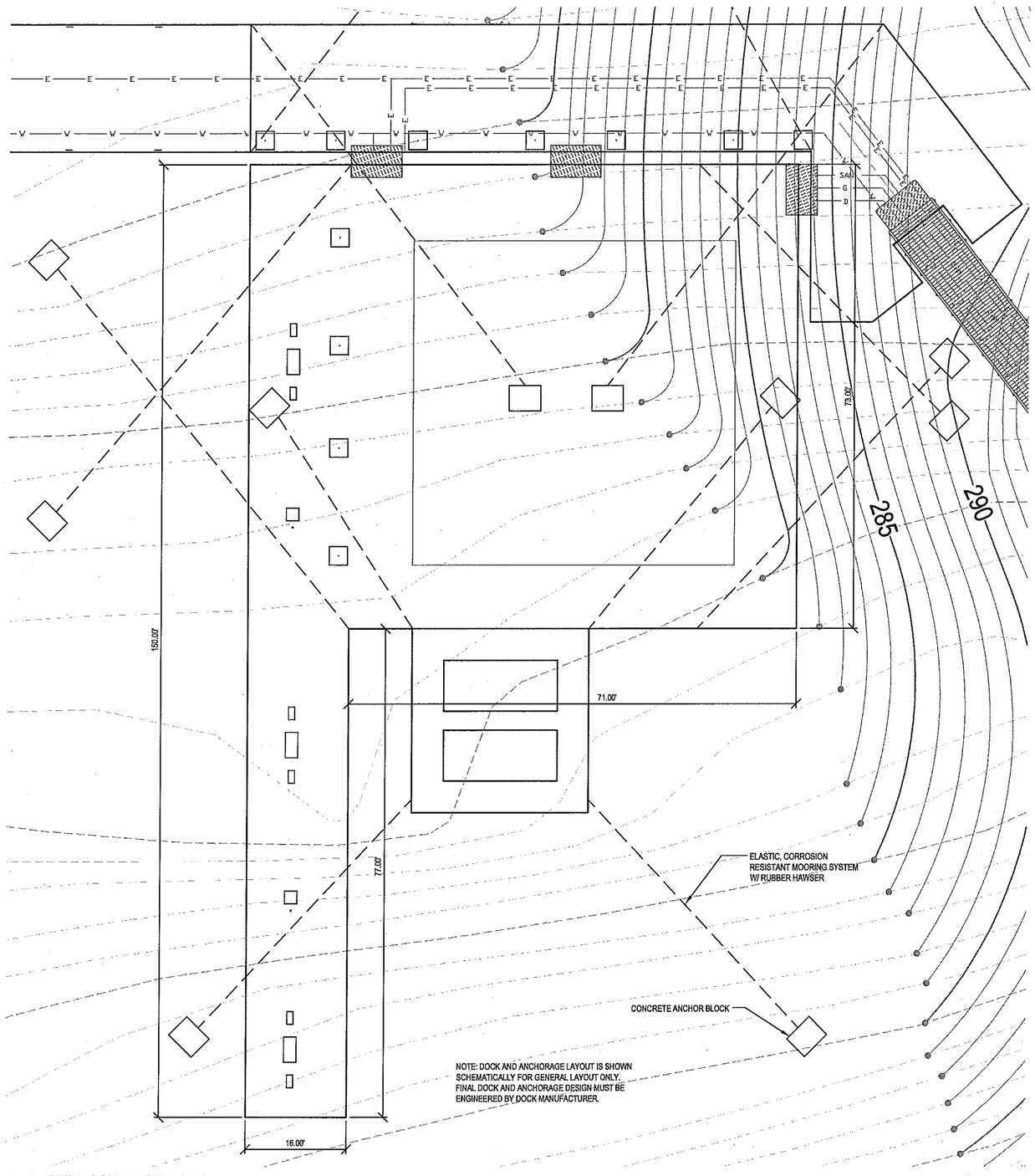

1
D-4.1

FUEL DOCK LAYOUT PLAN

SCALE: 1" = 20'

SCHULTZ PARK AND TRANSIENT DOCK

Owner:

CITY OF PADUCAH

JJR
landscape architecture
planning
urban design
civil engineering
environmental science

JJR, LLC
625 WILLIAMSON STREET,
MADISON, WISCONSIN 53703
608.251.1177 T
608.251.6147 F
www.jjr-us.com

ISSUED FOR	REV	DATE

SEALS AND SIGNATURES

NOT FOR CONSTRUCTION

KEY PLAN

DRAWING TITLE

FUEL DOCK & FLOATING BUILDING

SCALE

PROJECT NUMBER 24757.200

DRAWING NUMBER D-4.1

FILE:P:\24757\200\CAD\street\24757-200-SH-BLDG.dwg USER:jshepiro DATE:Oct. 08 2009 TIME: 01:25 pm

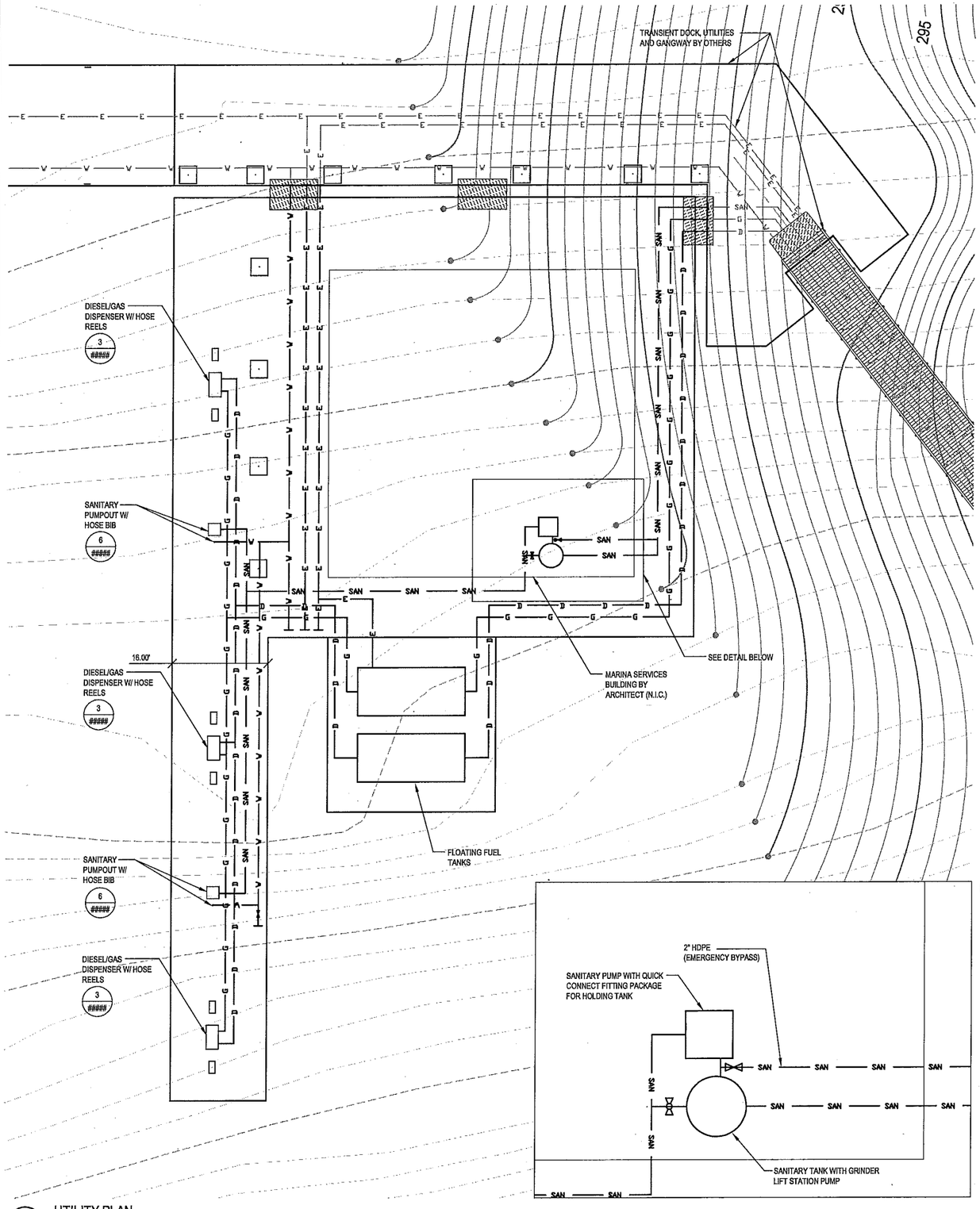

1 UTILITY PLAN

SCALE: 1" = 2'

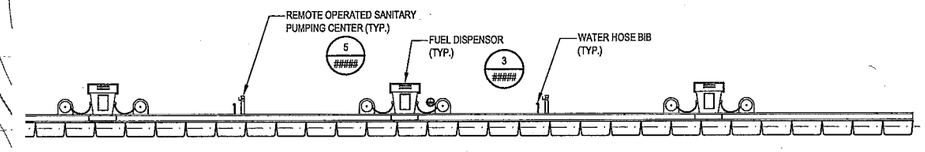

2 FUEL DOCK ELEVATION

SCALE: 1" = 10'

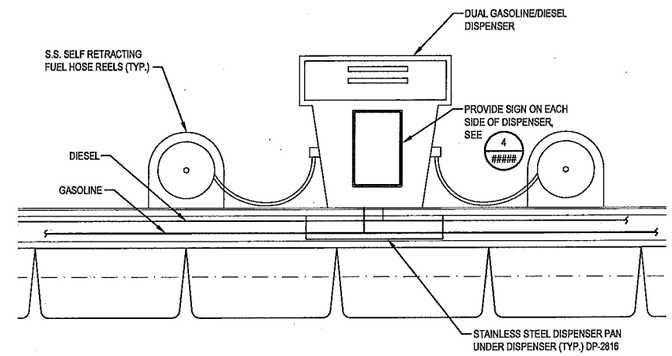

3 FUEL DISPENSER & HOSE REEL DETAIL

SCALE: 1" = 2'

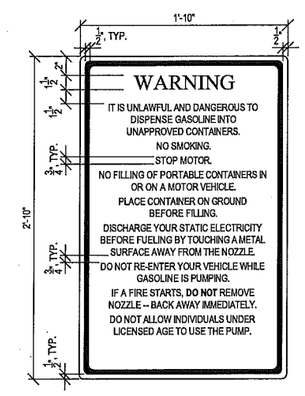

4 FUEL DOCK RULES SIGN DETAILS

SCALE: NTS

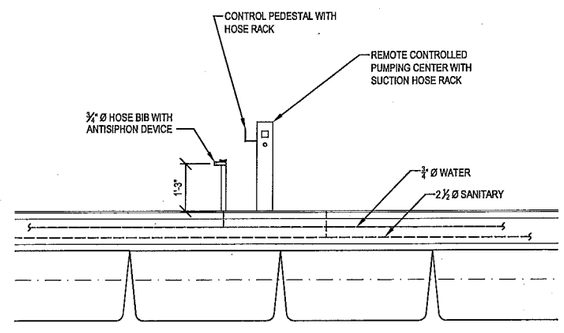

5 SANITARY PUMPOUT DETAIL

SCALE: NTS

SCHULTZ PARK AND TRANSIENT DOCK

Owner:

CITY OF PADUCAH

JJR landscape architecture planning urban design civil engineering environmental science

JJR, LLC
625 WILLIAMSON STREET,
MADISON, WISCONSIN 53703
608.251.1177 T
608.251.6147 F
www.jjr-us.com

ISSUED FOR	REV	DATE

SEALS AND SIGNATURES

NOT FOR CONSTRUCTION

KEY PLAN

DRAWING TITLE

FUEL DOCK & FLOATING BUILDING DETAILS

SCALE

PROJECT NUMBER 24757.200

DRAWING NUMBER D-5.1

FILE:P:\24757\200\CAD\sheet\24757-200-SH-BLDG.dwg USER: jallopiro DATE: Oct, 08 2009 TIME: 01:56 pm

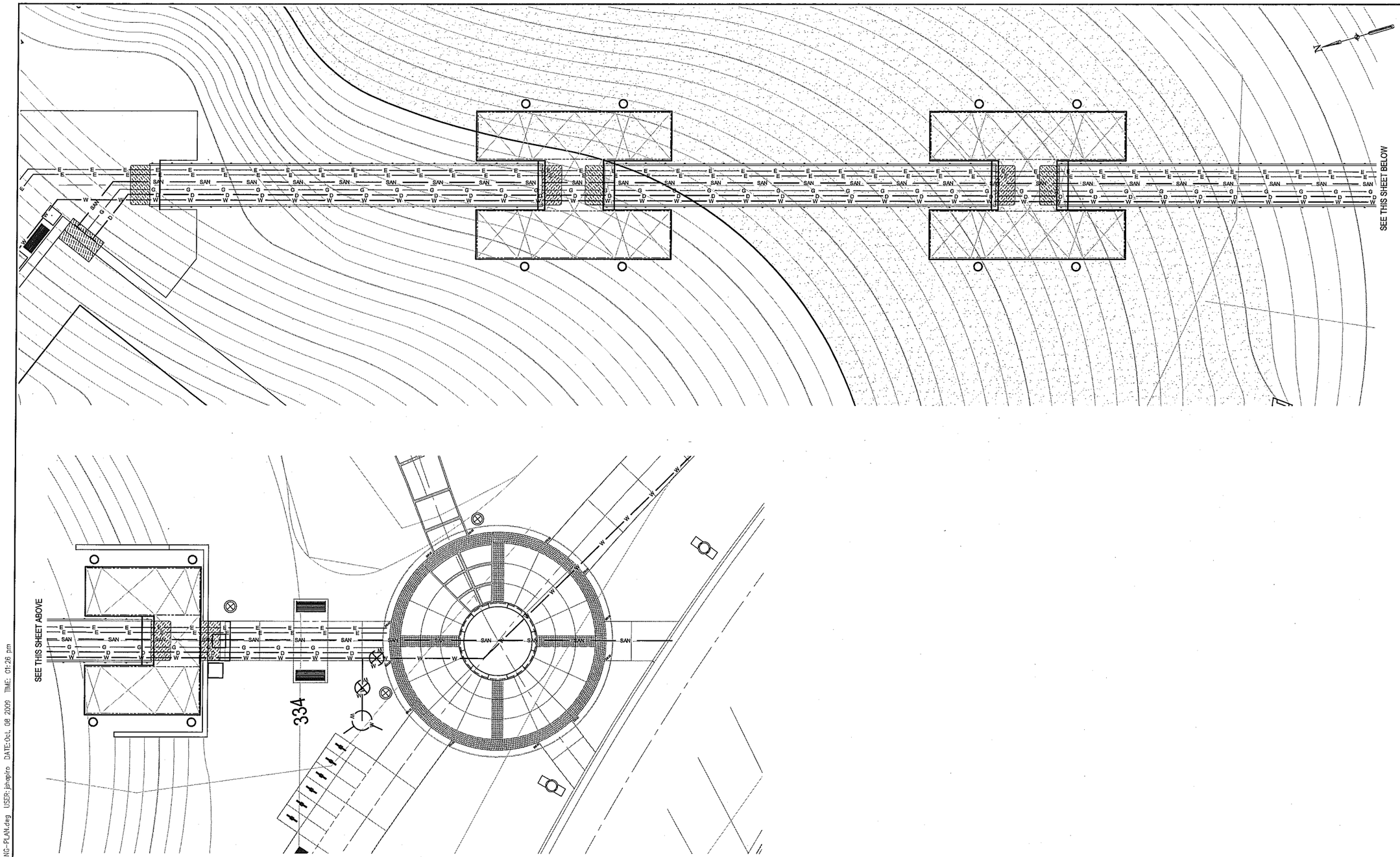

SCHULTZ PARK AND TRANSIENT DOCK

Owner:

CITY OF PADUCAH

JJR
landscape architecture
planning
urban design
civil engineering
environmental science

JJR, LLC
625 WILLIAMSON STREET,
MADISON, WISCONSIN 53703
608.251.1177 T
608.251.6147 F
www.jjr-us.com

ISSUED FOR	REV	DATE

SEALS AND SIGNATURES

NOT FOR CONSTRUCTION

KEY PLAN

DRAWING TITLE

GANGWAY PLAN

SCALE 24757.200

PROJECT NUMBER

G-1.1

DRAWING NUMBER

FILE:P:\24757\200\CAD\sheet\24757-200-SH-GANG-PLAN.dwg USER: jshapiro DATE: Oct. 08 2009 TIME: 01:26 pm

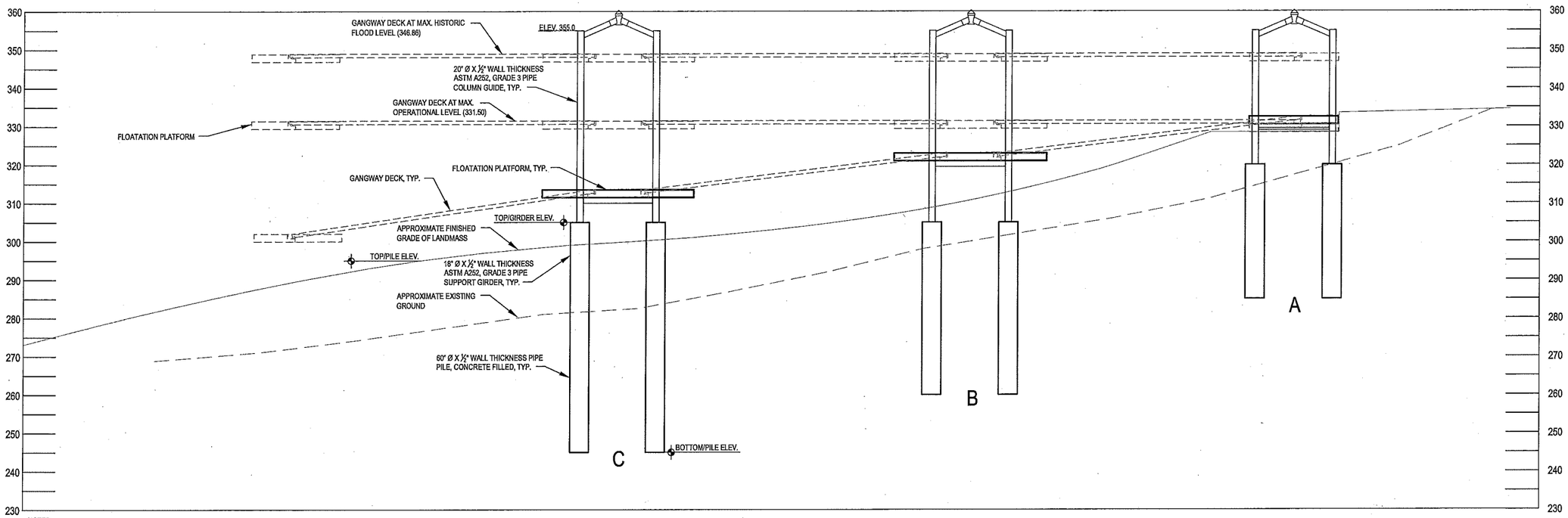

NOTES:
1. REFER TO PLATFORM GUIDE COLUMN SCHEDULE FOR LOCATION AND ELEVATION REQUIREMENTS.
2. REFER TO APPLICABLE PLANS AND DETAILS FOR ADDITIONAL INFORMATION.

1 / G-1.2 GANGWAY ELEVATION

SCALE: NONE

PLATFORM GUIDE COLUMN SCHEDULE					
MARK	NORTHING	EASTING	TOP/PILE ELEVATION	BOTTOM/PILE ELEVATION	TOP/GIRDER ELEVATION
A1	320.0	320.0	320.0	285.0	330.5
A2			320.0	285.0	330.5
A3			320.0	285.0	330.5
A4			320.0	285.0	330.5
B1			305.0	260.0	321
B2			305.0	260.0	321
B3			305.0	260.0	321
B4			305.0	260.0	321
C1			305.0	245.0	311.5
C2			305.0	245.0	311.5
C3			305.0	245.0	311.5
C4			305.0	245.0	311.5

NOTES:

1. TOP OF COLUMN ELEVATION IS 355.00.

2. THE TOP OF GIRDER ELEVATION IS BASED UPON A 36" TOTAL DEPTH FOR THE SUPPORT PLATFORM.

3. 60" DIAMETER PILE INSTALLATION TOLERANCES:
   A. DEVIATION FROM PLUMB SHALL NOT EXCEED 2 INCHES IN 10 FEET FROM THE VERTICAL.
   B. DEVIATION OF THE LOCATION OF THE TOP OF PILE FROM THAT SHOWN ON THE PLANS SHALL NOT EXCEED 6 INCHES.

4. COLUMN INSTALLATION TOLERANCES SHALL BE IN ACCORDANCE WITH AISC SPECIFICATIONS INCLUDING BUT NOT LIMITED TO THE FOLLOWING:
   A. DEVIATION FROM PLUMB SHALL NOT EXCEED 1 FOOT IN 500 FEET FROM THE VERTICAL.
   B. DEVIATION OF THE LOCATION OF THE COLUMN INTERFACE @ THE TOP OF PILE FROM THAT SHOWN ON THE PLANS SHALL NOT EXCEED ½ INCH.
   C. DEVIATION OF THE LOCATION OF THE TOP OF PILE FROM THAT SHOWN ON THE PLANS SHALL NOT EXCEED 1 INCH.

2 / G-1.2 PLATFORM GUIDE COLUMN SCHEDULE

SCALE: NONE

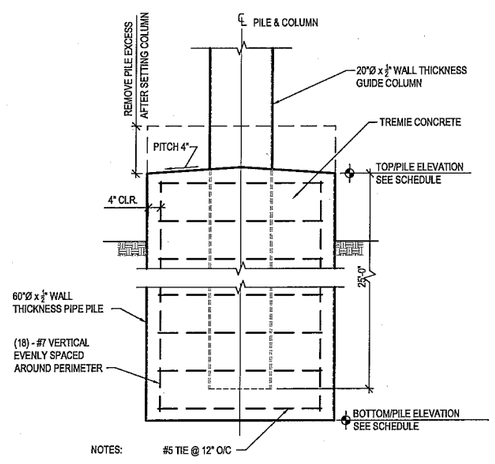

NOTES:

1. SOIL TO BE REMOVED FROM PILE INTERIOR TO PROVIDE CLEAN SHAFT FOR CONCRETE PLACEMENT.
2. PROVIDE SPACERS AS REQUIRED TO CENTER REINFORCEMENT CAGE IN SHAFT.
3. REFER TO GUIDE COLUMN SCHEDULE FOR ADDITIONAL INFORMATION.
4. CONTRACTOR SHALL PROVIDE TEMPORARY PILE CAP TO KEEP SHAFT CLEAN DURING FILLING OPERATIONS.

1 / G-1.2 PLATFORM GUIDE COLUMN

SCALE: 1" = 5'

SCHULTZ PARK AND TRANSIENT DOCK

Owner:

CITY OF PADUCAH

JJR
landscape architecture
planning
urban design
civil engineering
environmental science

JJR, LLC
625 WILLIAMSON STREET,
MADISON, WISCONSIN 53703
608.251.1177 T
608.251.6147 F
www.jjr-us.com

ISSUED FOR	REV	DATE

SEALS AND SIGNATURES

NOT FOR CONSTRUCTION

KEY PLAN

DRAWING TITLE

GANGWAY ELEVATION AND DETAILS

SCALE

PROJECT NUMBER 24757.200

DRAWING NUMBER G-1.2

FILE:P:\24757\2001\CAD\sheet\24757-200-SH-DET-GANG.dwg USER: ginspiro DATE: Oct. 08 2009 TIME: 01:26 pm

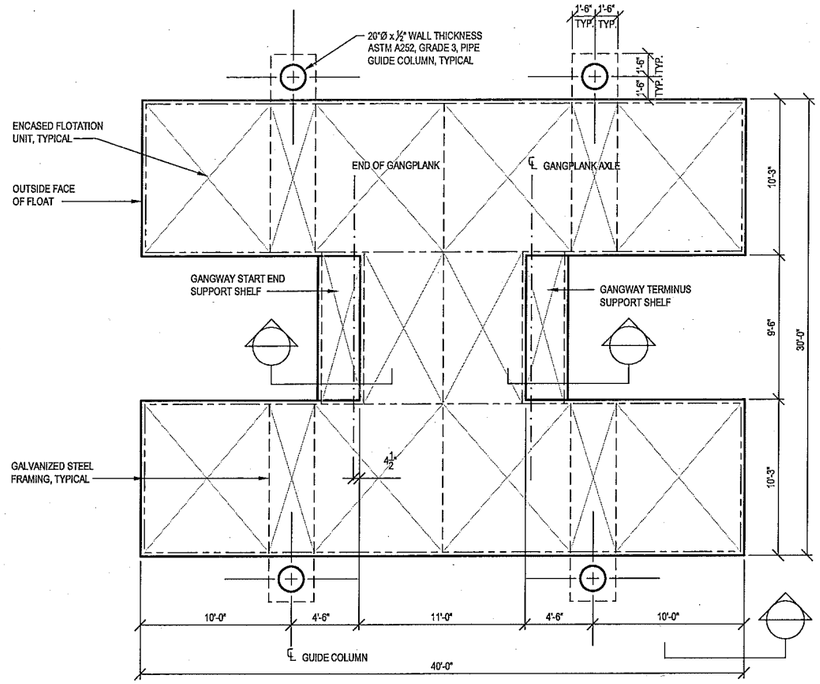

1 G-1.3 GANGWAY INTERMEDIATE FLOAT PLAN VIEW

SCALE: 1" = 5'

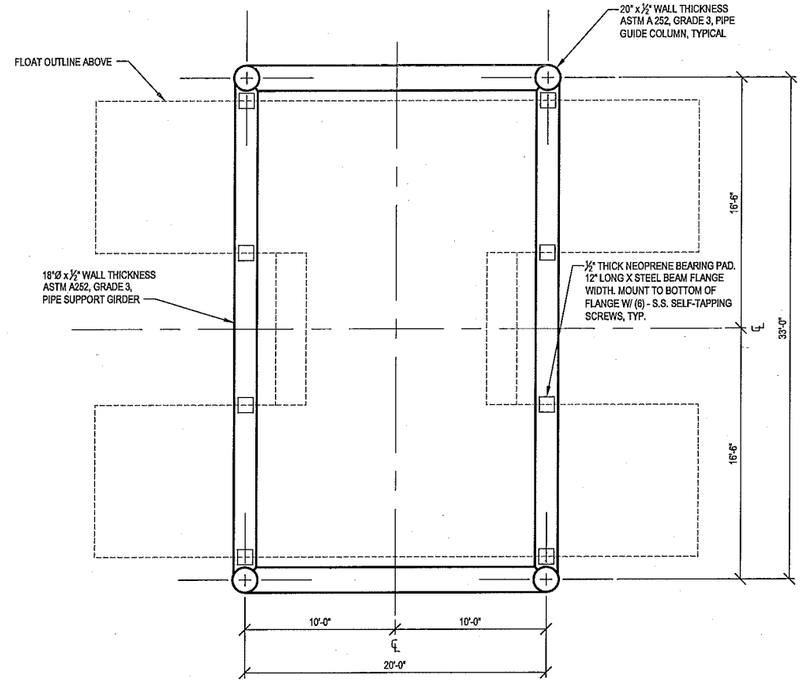

2 G-1.3 GANGWAY INTERMEDIATE FLOAT SUPPORT FRAMING PLAN

SCALE: 1" = 5'

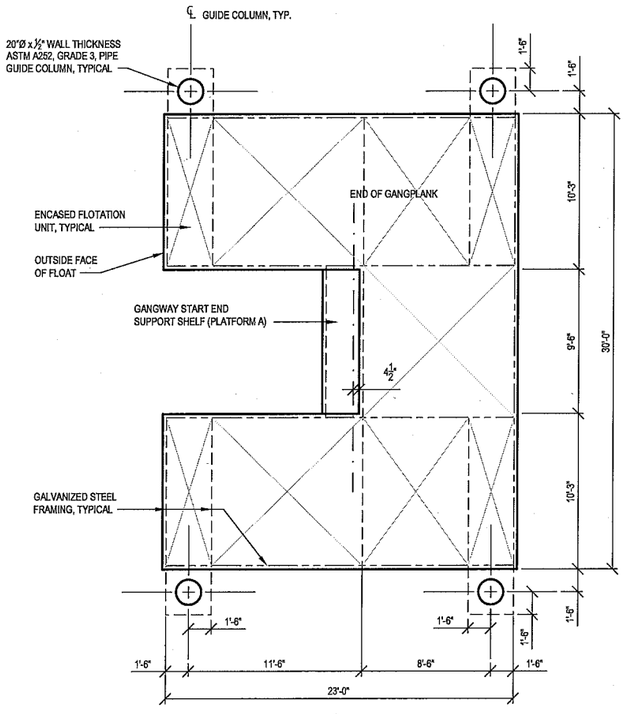

3 G-1.3 GANGWAY FLOAT "A" PLAN VIEW

SCALE: 1" = 5'

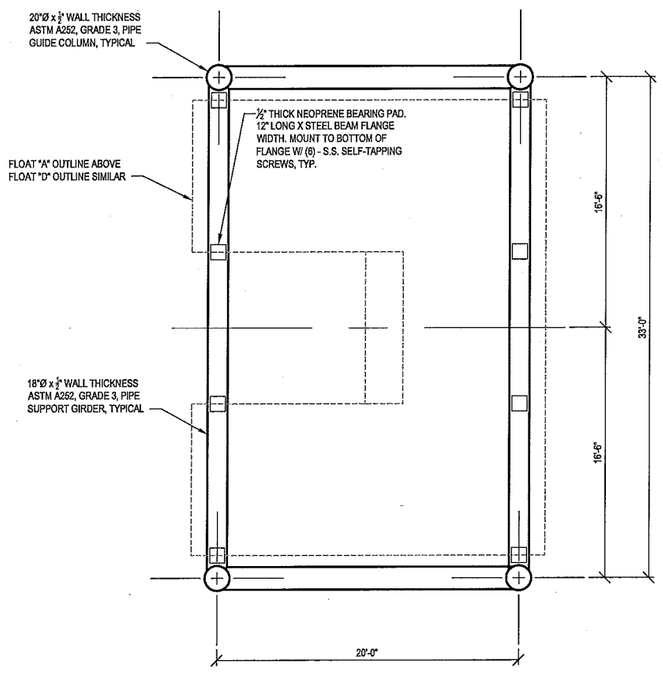

4 G-1.3 GANGWAY SUPPORT FLOAT "A" AND "O" FRAMING PLAN

SCALE: 1" = 5'

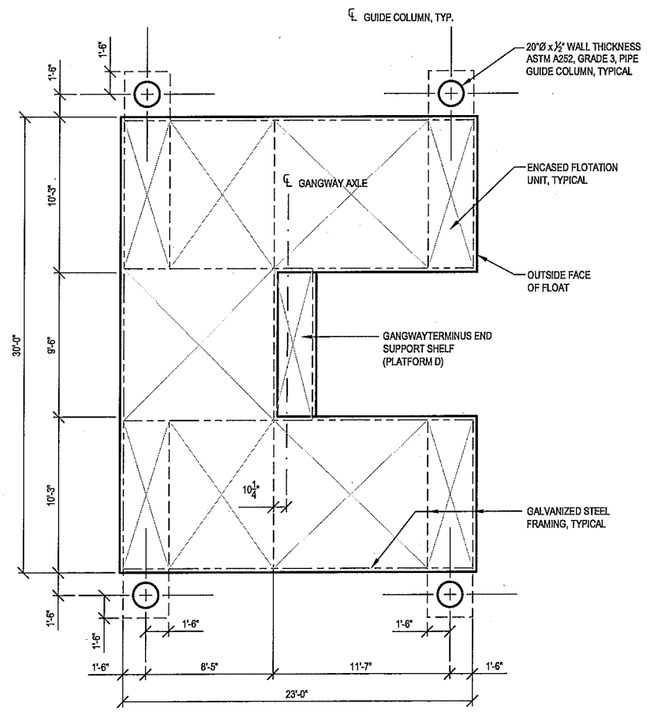

5 G-1.3 GANGWAY TERMINUS FLOAT PLAN VIEW

SCALE: 1" = 5'

SCHULTZ PARK AND TRANSIENT DOCK

Owner:

CITY OF PADUCAH

JJR landscape architecture planning urban design civil engineering environmental science

JJR, LLC
625 WILLIAMSON STREET,
MADISON, WISCONSIN 53703
608.251.1177 T
608.251.6147 F
www.jjr-us.com

ISSUED FOR	REV	DATE

SEALS AND SIGNATURES

NOT FOR CONSTRUCTION

KEY PLAN

DRAWING TITLE

GANGWAY PLATFORM DETAILS

SCALE 24757.200

PROJECT NUMBER

DRAWING NUMBER G-1.3

FILE:P:\24757\200\CAD\sheet\24757-200-SH-DET-GANG.dwg USER: jchapiro DATE: Oct 08 2009 TIME: 01:25 pm

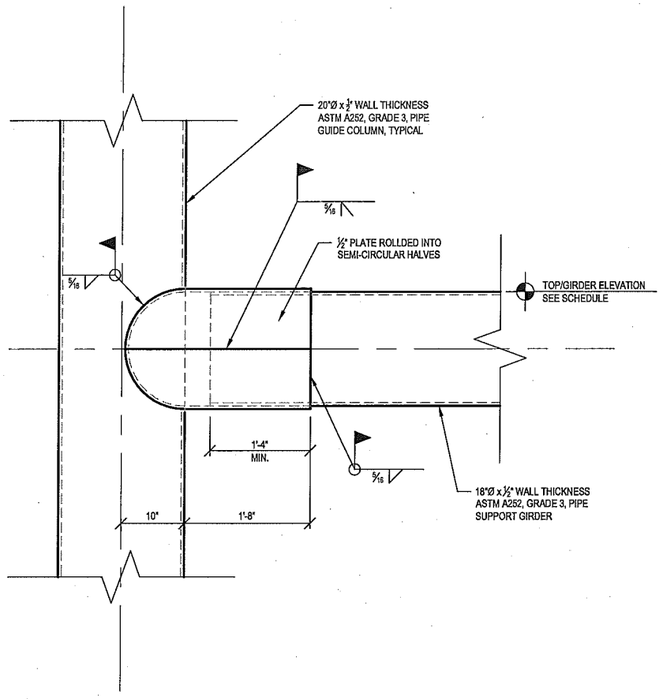

1 / G-1.4 INTERMEDIATE PLATFORM SUPPORT COLUMN/GIRDER CONNECTION

SCALE: 1" = 1'

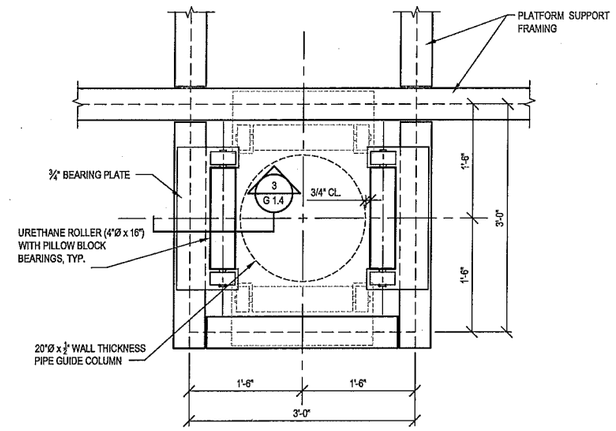

NOTES:

1. PROVIDE (2) ROLLERS AT OPPOSITE SIDES AT EACH GUIDE COLUMN. ORIENTATION OF ROLLER PAIR AT DIAGONALLY OPPOSITE CORNERS SHALL BE ORIENTED ALONG IDENTICAL MAJOR AXIS.

2. INTERMEDIATE PLATFORM MFG. SHALL INCORPORATE FIXITY AT SUPPORT FRAMING INTERSECTIONS TO MAINTAIN SQUARENESS OF GUIDE BRACKETS.

3. SUPPORT FRAMING SHALL BE DESIGNED FOR LIVE LOAD PLUS DEAD LOAD WHILE SPANNING BETWEEN COLUMN LOCATIONS.

4. ROLLER/BEARING ASSEMBLY SHALL BE REMOVABLE.

2 / G-1.4 INTERMEDIATE PLATFORM SUPPORT COLUMN/GIRDER CONNECTION

SCALE: 1" = 1'

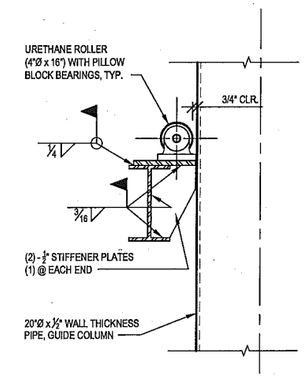

3 / G-1.4 SECTION AT GUIDE COLUMN ROLLER

SCALE: NONE

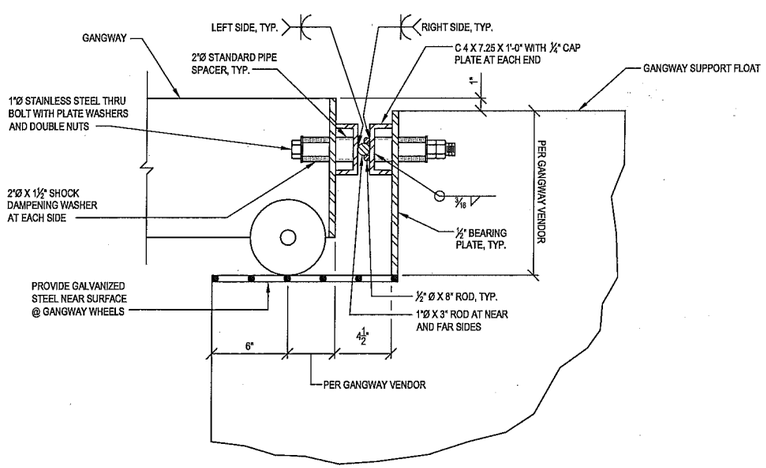

NOTE:

1. THE GANGWAY/SUPPORT FLOAT ARTICULATING CONNECTION SHALL BE LOCATED ALONG THE LONGITUDINAL CENTERLINE.
2. PROVIDE 1½"Ø HOLES AT CHANNEL AND BEARING PLATE.
3. PROVIDE (2) -¾" HIGH STRENGTH TRANSPORT CHAINS AS SAFETY LINK BETWEEN GANGWAY AND SUPPORT FLOAT. EXTREME CHAIN LIMIT SHALL KEEP GANGWAY ON SUPPORT FLOAT SHELF. REINFORCE GANGWAY AND SUPPORT FLOAT SHELF AT CHAIN ATTACHMENT LOCATION.
4. REINFORCE GANGWAY AND SUPPORT FLOAT STRUCTURE AT ARTICULATING CONNECTION LOCATION.
5. PROVIDE A 3' X GANGWAY WIDTH NON-SLIP SURFACE SKID PLATE HINGED AT GANGWAY. SKID PLATE IS NOT SHOWN FOR CLARITY. PROVIDE GALVANIZED STEEL WEAR SURFACE AT SKID PLATE END RANGE.

4 / G-1.4 GANGWAY ARTICULATING END DETAIL

SCALE: NONE

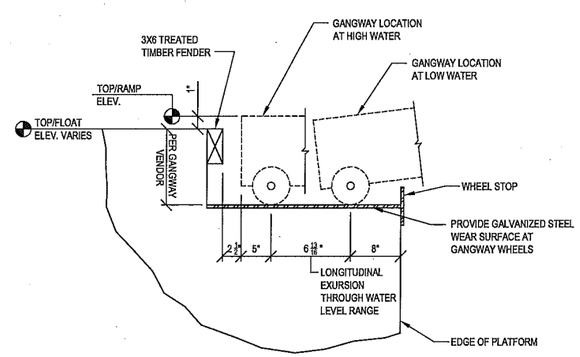

NOTE:
PROVIDE A 3' X GANGWAY WIDTH NON-SLIP SURFACE SKID PLATE HINGED AT GANGWAY FREE END, SKID PLATE IS NOT SHOWN FOR CLARITY. PROVIDE GALVANIZED STEEL WEAR SURFACE AT SKID PLATE END RANGE.

5 / G-1.4 GANGWAY FREE END SHELF

SCALE: NONE

SCHULTZ PARK AND TRANSIENT DOCK

Owner:

CITY OF PADUCAH

JJR landscape architecture planning urban design civil engineering environmental science

JJR, LLC
625 WILLIAMSON STREET,
MADISON, WISCONSIN 53703
608.251.1177 T
608.251.6147 F
www.jjr-us.com

ISSUED FOR	REV	DATE

SEALS AND SIGNATURES

NOT FOR CONSTRUCTION

KEY PLAN

DRAWING TITLE

GANGWAY PLATFORM DETAILS

SCALE

PROJECT NUMBER 24757.200

DRAWING NUMBER G-1.4

FILE:P:\24757\200\CAD\sheet\24757-200-SH-DET-GANG.dwg USER: bhapiro DATE: Oct. 08 2009 TIME: 01:26 pm

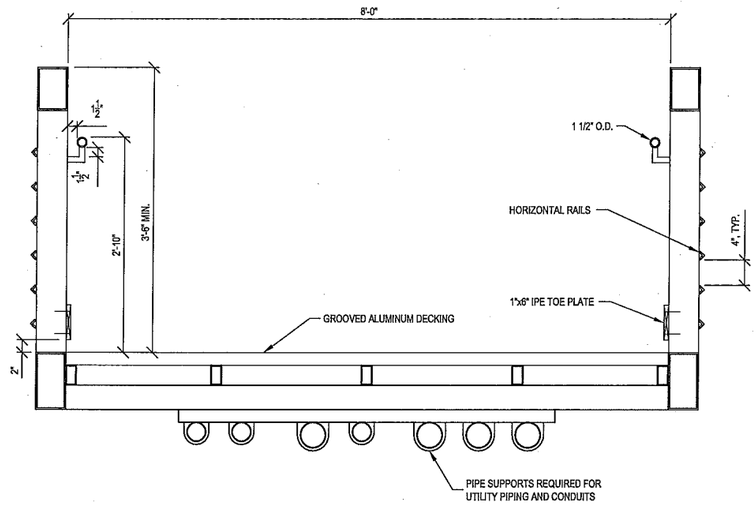

1 / G-1.5 TYPICAL GANGWAY SECTION

SCALE: 1" = 1'

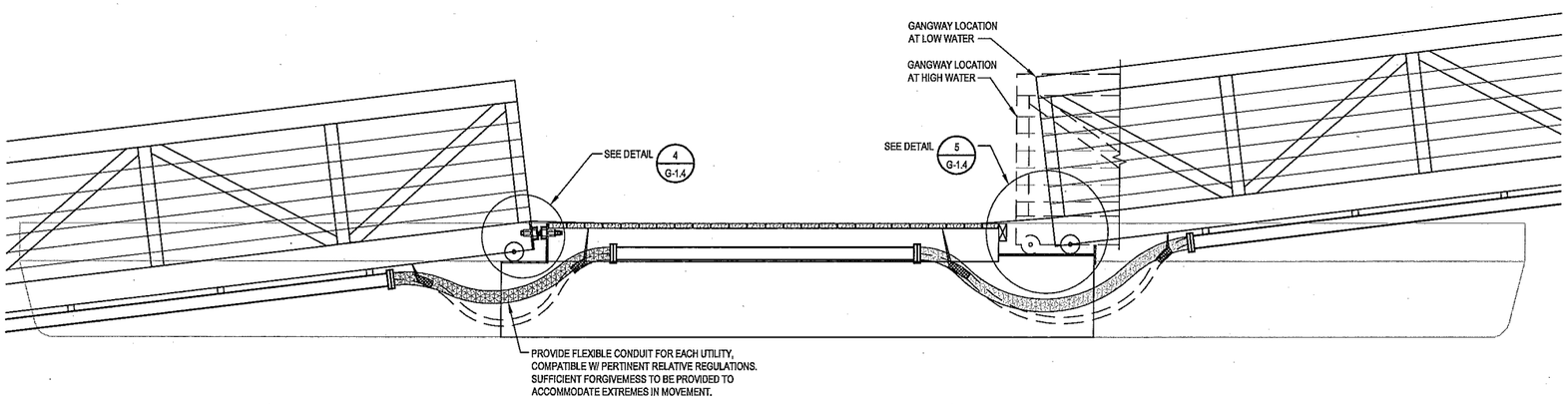

2 / G-1.5 SECTION THRU PLATFORM

SCALE: 1/2" = 1'

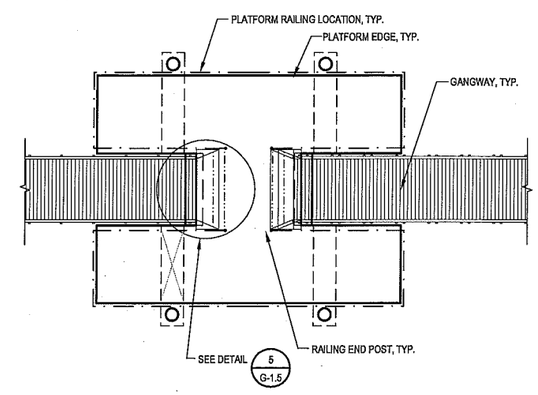

4 / G-1.5 RAILING LAYOUT

SCALE: 1" = 10'-0"

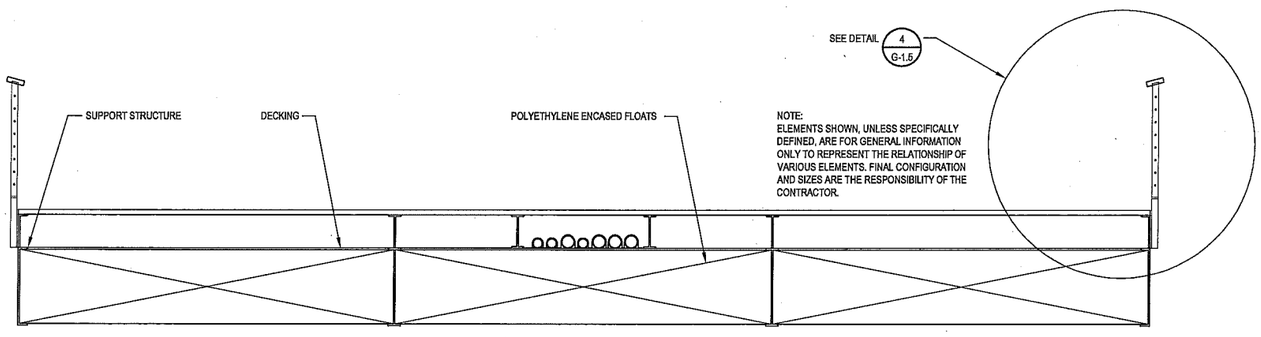

3 / G-1.5 SECTION THRU PLATFORM

SCALE: 1/2" = 1'

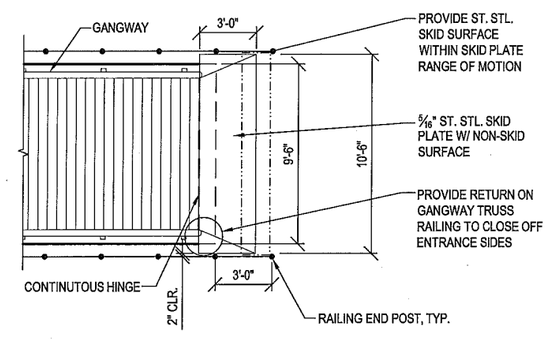

5 / G-1.5 GANGWAY DETAIL

SCALE: 1" = 5'-0"

SCHULTZ PARK AND TRANSIENT DOCK

Owner:

CITY OF PADUCAH

JJR
landscape architecture
planning
urban design
civil engineering
environmental science

JJR, LLC
625 WILLIAMSON STREET,
MADISON, WISCONSIN 53703
608.251.1177 T
608.251.6147 F
www.jjr-us.com

ISSUED FOR	REV	DATE

SEALS AND SIGNATURES

NOT FOR CONSTRUCTION

KEY PLAN

DRAWING TITLE

GANGWAY PLATFORM DETAILS

SCALE

PROJECT NUMBER 24757.200

DRAWING NUMBER G-1.5

FILE:P:\24757\200\CAD\sheet\24757-200-SH-DET-GANG.dwg USER:jshapiro DATE:Oct. 08, 2009 TIME: 01:26 pm

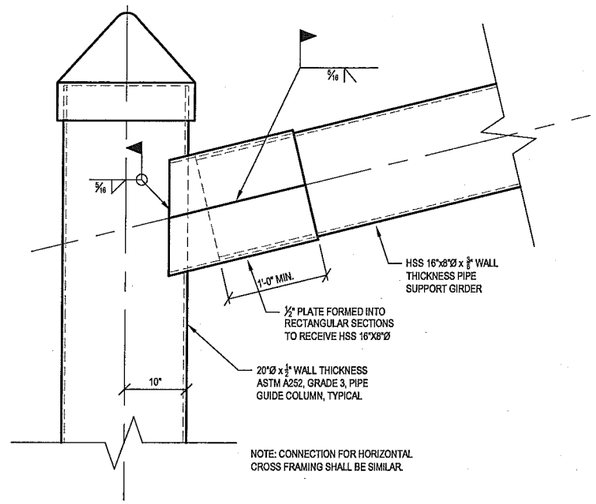

1 G-1.6 TOP FRAME COLUMN CONNECTION

SCALE: 1" = 1'

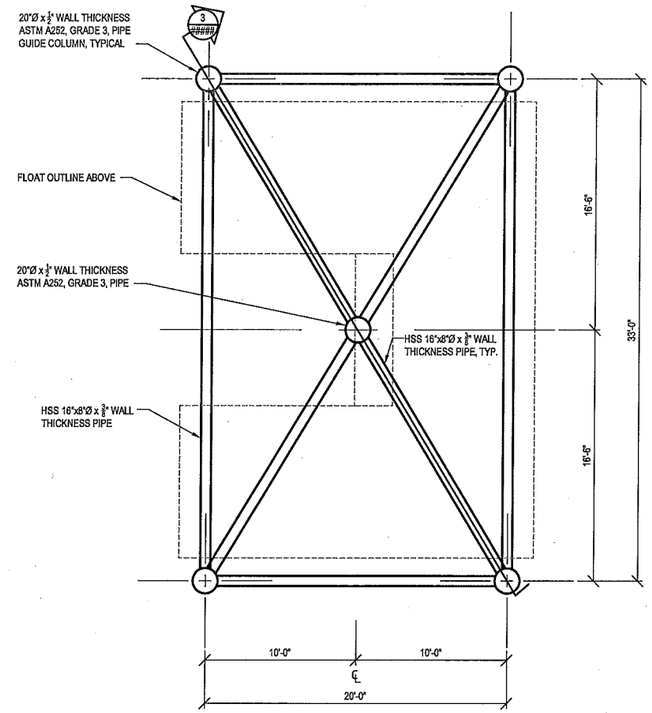

2 G-1.6 GANGWAY PIPE GUIDE TOP CROSS BRACING FRAME - PLAN

SCALE: 1" = 5'

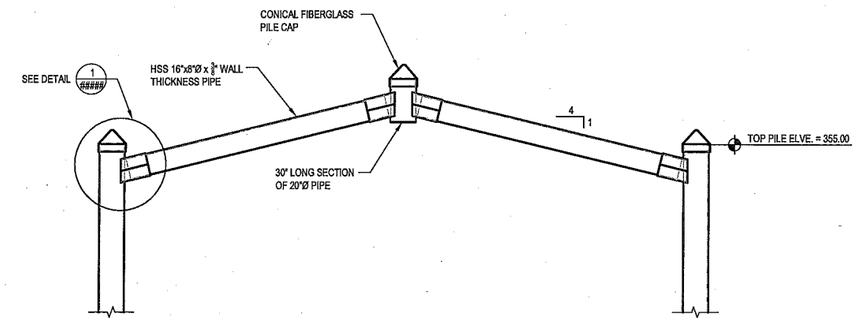

3 G-1.6 GANGWAY PIPE GUIDE TOP CROSS BRACING FRAME - SECTION

SCALE: 1" = 5'

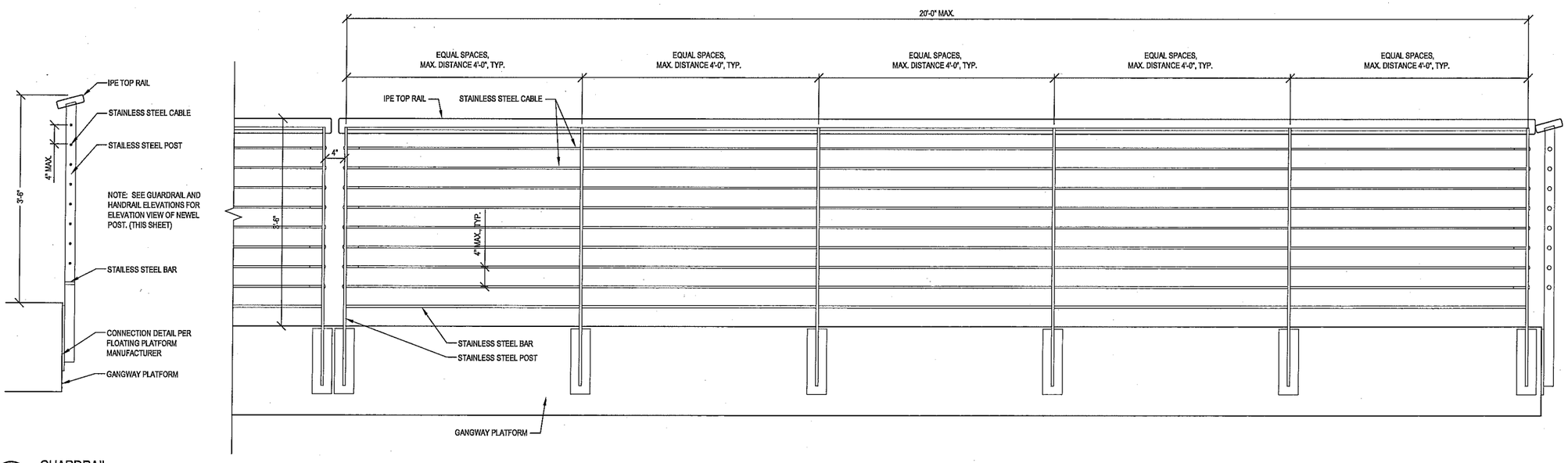

4 G-1.6 GUARDRAIL

SCALE: 1" = 1'

SCHULTZ PARK AND TRANSIENT DOCK

Owner:

CITY OF PADUCAH

JJR landscape architecture planning urban design civil engineering environmental science

JJR, LLC
625 WILLIAMSON STREET,
MADISON, WISCONSIN 53703
608.251.1177 T
608.251.6147 F
www.jjr-us.com

ISSUED FOR	REV	DATE

SEALS AND SIGNATURES

NOT FOR CONSTRUCTION

KEY PLAN

DRAWING TITLE

GANGWAY PLATFORM DETAILS

SCALE 24757.200

PROJECT NUMBER

G-1.6

DRAWING NUMBER

FILE:P:\24757\280\CAD\sheet\24757-200-SH-DET-GANG.dwg USER: jallaqpro DATE: Oct, 08 2009 TIME: 01:26 pm