1.0 INTRODUCTION

The North Star Steel Kentucky, Inc., Calvert City plant, is located at 1035 Shar-Cal Road, Calvert City, Kentucky (Figure 1) and occupies approximately 357 acres of land of which approximately 49 acres are utilized for industrial activities. The facility consists of a production mill containing approximately 330,000 square feet and other facilities including an Administrative Office, Amenities Building, Roll Shop, Storeroom, Water Treatment Building, Utility Maintenance Building, Air Compressor Building and a Fuel Storage Area. Also located on the plant site are a truck staging area, billet yard, finished product lot and a fire pond.

This document consists of KPDES Forms 1, C & F. It has been prepared in order to renew Kentucky Pollutant Discharge Elimination System (KPDES) Permit KY0072231 for North Star Steel Kentucky, Inc. This facility has three outfalls for discharge.

KPDES FORM 1

KENTUCKY POLLUTANT DISCHARGE ELIMINATION SYSTEM

2003 SEP 18 P 1:00

PERMIT APPLICATION

RECEIVED BY KPDES BRANCH

This is an application to: (check one)

- ☐ Apply for a new permit.
- ☒ Apply for reissuance of expiring permit.
- ☐ Apply for a construction permit.
- ☐ Modify an existing permit.
  Give reason for modification under Item II.A.

A complete application consists of this form and one of the following:
Form A, Form B, Form C, Form F, or Short Form C

For additional information contact:
KPDES Branch (502) 564-3410

I. FACILITY LOCATION AND CONTACT INFORMATION	AGENCY USE
A. Name of business, municipality, company, etc. requesting permit North Star Steel, KY Inc.	
B. Facility Name and Location	C. Facility Owner/Mailing Address
Facility Location Name: North Star Steel KY, Inc.	Owner Name: North Star Steel, KY, Inc.
Facility Location Address (i.e. street, road, etc.): 1035 Shar-Cal Road	Mailing Street: P.O. Box 468
Facility Location City, State, Zip Code: Calvert City, KY 42029	Mailing City, State, Zip Code: Calvert City, KY 42029
	Telephone Number: (270) 395-3100

II. FACILITY DESCRIPTION

A. Provide a brief description of activities, products, etc: Carbon Steel Hot Rolling Mill

B. Standard Industrial Classification (SIC) Code and Description

Principal SIC Code & Description:	3312 - Carbon Steel Hot Rolling Mill		
Other SIC Codes:	NA	NA	NA

III. FACILITY LOCATION

A. Attach a U.S. Geological Survey 7 ½ minute quadrangle map for the site. (See instructions)

B. County where facility is located: Marshall County, KY	City where facility is located (if applicable): Calvert City, KY

C. Body of water receiving discharge:
001-Tennssee River, 002-Fire pond then flows to 001, 003-An unnamed tributary of Little Cypress Creek

D. Facility Site Latitude (degrees, minutes, seconds): 37 deg 03 min 00 sec	Facility Site Longitude (degrees, minutes, seconds): 88 deg 23 min 40 sec

E. Method used to obtain latitude & longitude (see instructions): Measured From Attached USGS Map

F. Facility Dun and Bradstreet Number (DUNS #) (if applicable): 098098569

IV. OWNER/OPERATOR INFORMATION

A. Type of Ownership:

☐ Publicly Owned ☒ Privately Owned ☐ State Owned ☐ Both Public and Private Owned ☐ Federally owned

B. Operator Contact Information (See instructions)

Name of Treatment Plant Operator: North Star Steel KY, Inc.	Telephone Number: (270) 395-3100
Operator Mailing Address (Street): 1035 Shar-Cal Road, P.O. Box 468	
Operator Mailing Address (City, State, Zip Code): Calvert City, Ky 42029	
Is the operator also the owner? Yes ☒ No ☐	Is the operator certified? If yes, list certification class and number below. Yes ☒ No ☐
Certification Class: III	Certification Number: 4808

V. EXISTING ENVIRONMENTAL PERMITS

Current NPDES Number: KY 0072231	Issue Date of Current Permit: February 1, 2001	Expiration Date of Current Permit: March 31, 2004
Number of Times Permit Reissued: 4	Date of Original Permit Issuance: April 23, 1984	Sludge Disposal Permit Number: NA
Kentucky DOW Operational Permit #: NA	Kentucky DSMRE Permit Number(s): NA	NA

C. Which of the following additional environmental permit/registration categories will also apply to this facility?

CATEGORY	EXISTING PERMIT WITH NO.	PERMIT NEEDED WITH PLANNED APPLICATION DATE
Air Emission Source	Title V V97038	
Solid or Special Waste	NA	
Hazardous Waste - Registration or Permit	KYD-098-098-569 (No longer has permit)	

VI. DISCHARGE MONITORING REPORTS (DMRs)

KPDES permit holders are required to submit DMRs to the Division of Water on a regular schedule (as defined by the KPDES permit). The information in this section serves to specifically identify the department, office or individual you designate as responsible for submitting DMR forms to the Division of Water.

A. Name of department, office or official submitting DMRs:	Mark Quiring, General Manager, North Star Steel
B. Address where DMR forms are to be sent. (Complete only if address is different from mailing address in Section I.)	
DMR Mailing Name:	North Star Steel, KY Inc.
DMR Mailing Street:	P.O. Box 468
DMR Mailing City, State, Zip Code:	Calvert City, KY 42029
DMR Official Telephone Number:	(270) 395-3100

VII. APPLICATION FILING FEE

KPDES regulations require that a permit applicant pay an application filing fee equal to twenty percent of the permit base fee. Please examine the base and filing fees listed below and in the Form 1 instructions and enclose a check payable to "Kentucky State Treasurer" for the appropriate amount. Descriptions of the base fee amounts are given in the "General Instructions."

Facility Fee Category:	Filing Fee Enclosed:
Major Industry	$640 - Attached

VIII. CERTIFICATION

I certify under penalty of law that this document and all attachments were prepared under my direction or supervision in accordance with a system designed to assure that qualified personnel properly gather and evaluate the information submitted. Based on my inquiry of the person or persons who manage the system, or those persons directly responsible for gathering the information, the information submitted is, to the best of my knowledge and belief, true, accurate, and complete. I am aware that there are significant penalties for submitting false information, including the possibility of fine and imprisonment for knowing violations.

NAME AND OFFICIAL TITLE (type or print):	TELEPHONE NUMBER (area code and number):
Mark Quiring, Plant Manger	(270) 395-3111
SIGNATURE Mark Q	DATE: 9/18/03

KPDES FORM C

KENTUCKY POLLUTANT DISCHARGE ELIMINATION SYSTEM

2003 SEP 18 P 1:00

PERMIT APPLICATION

RECEIVED BY KPDES BRANCH

A complete application consists of this form and Form 1.
For additional information, contact KPDES Branch, (502) 564-3410.

Name of Facility: North Star Steel KY, Inc.	County: Marshall							
I. OUTFALL LOCATION	AGENCY USE							

For each outfall list the latitude and longitude of its location to the nearest 15 seconds and the name of the receiving water.

Outfall No. (list)	LATITUDE			LONGITUDE			RECEIVING WATER (name)
	Degrees	Minutes	Seconds	Degrees	Minutes	Seconds	
001	37	03	12	88	23	51	Tennessee River
002	37	03	00	88	23	40	Fire Pond then flows to 001
003	37	02	52	88	23	30	Unnamed trib Little Cypress ck

II. FLOWS, SOURCES OF POLLUTION, AND TREATMENT TECHNOLOGIES

A. Attach a line drawing showing the water flow through the facility. Indicate sources of intake water, operations contributing wastewater to the effluent, and treatment units labeled to correspond to the more detailed descriptions in Item B. Construct a water balance on the line drawing by showing average flows between intakes, operations, treatment units, and outfall. If a water balance cannot be determined (e.g., for certain mining activities), provide a pictorial description of the nature and amount of any sources of water and any collection or treatment measures.

B. For each outfall, provide a description of: (1) all operations contributing wastewater to the effluent, including process wastewater, sanitary wastewater, cooling water, and storm water runoff; (2) the average flow contributed by each operation; and (3) the treatment received by the wastewater. Continue on additional sheets if necessary.

OUTFALL NO. (list)	OPERATION(S) CONTRIBUTING FLOW		TREATMENT	
	Operation (list)	Avg/Design Flow (include units)	Description	List Codes from Table C-1
001	Hot Rolling Contact	152,300 GPD	Settling Clarifier	1 U
	Process Water & Stormwater			
	Stormwater			
002	Sanitary Wastewater	150 GPD	Activated Sludge	3 A
003	Stormwater	6,900 GPD	None	4 A
		As measured		
		from 1 event		

I. FLOWS, SOURCES OF POLLUTION, AND TREATMENT TECHNOLOGIES (Continued)

C. Except for storm water runoff, leaks, or spills, are any of the discharges described in Items II-A or B intermittent or seasonal?

☐ Yes (Complete the following table.) ☒ No (Go to Section III.)

OUTFALL NUMBER (list)	OPERATIONS CONTRIBUTING FLOW (list)	FREQUENCY		FLOW				
		Days Per Week (specify average)	Months Per Year (specify average)	Flow Rate (in mgd)		Total volume (specify with units)		Duration (in days)
				Long-Term Average	Maximum Daily	Long-Term Average	Maximum Daily	
NA								

III. MAXIMUM PRODUCTION

A. Does an effluent guideline limitation promulgated by EPA under Section 304 of the Clean Water Act apply to your facility?

☒ Yes (Complete Item III-B) List effluent guideline category:

☐ No (Go to Section IV)

B. Are the limitations in the applicable effluent guideline expressed in terms of production (or other measures of operation)?

☒ Yes (Complete Item III-C) ☐ No (Go to Section IV)

C. If you answered "Yes" to Item III-B, list the quantity which represents the actual measurement of your maximum level of production, expressed in the terms and units used in the applicable effluent guideline, and indicate the affected outfalls.

MAXIMUM QUANTITY			Affected Outfalls (list outfall numbers)
Quantity Per Day	Units of Measure	Operation, Product, Material, Etc. (specify)	
2,400	Tons/Day	Hot Rolled Steel	001

IV. IMPROVEMENTS

A. Are you now required by any federal, state or local authority to meet any implementation schedule for the construction, upgrading, or operation of wastewater equipment or practices or any other environmental programs which may affect the discharges described in this application? This includes, but is not limited to, permit conditions, administrative or enforcement orders, enforcement compliance schedule letters, stipulations, court orders and grant or loan conditions.

☐ Yes (Complete the following table) ☒ No (Go to Item IV-B)

IDENTIFICATION OF CONDITION AGREEMENT, ETC.	AFFECTED OUTFALLS		BRIEF DESCRIPTION OF PROJECT	FINAL COMPLIANCE DATE	
	No.	Source of Discharge		Required	Projected
NA					

B. OPTIONAL: You may attach additional sheets describing any additional water pollution control programs (or other environmental projects which may affect your discharges) you now have under way or which you plan. Indicate whether each program is now under way or planned, and indicate your actual or planned schedules for construction.

V. INTAKE AND EFFLUENT CHARACTERISTICS

A, B, & C: See instructions before proceeding – Complete one set of tables for each outfall – Annotate the outfall number in the space provided.
NOTE: Tables V-A, V-B, and V-C are included on separate sheets numbered 5-18.

D. Use the space below to list any of the pollutants (refer to SARA Title III, Section 313) listed in Table C-3 of the instructions, which you know or have reason to believe is discharged or may be discharged from any outfall. For every pollutant you list, briefly describe the reasons you believe it to be present and report any analytical data in your possession.

POLLUTANT	SOURCE	POLLUTANT	SOURCE
None			

VI. POTENTIAL DISCHARGES NOT COVERED BY ANALYSIS

A. Is any pollutant listed in Item V-C a substance or a component of a substance which you use or produce, or expect to use or produce over the next 5 years as an immediate or final product or byproduct?

☒ Yes (List all such pollutants below) ☐ No (Go to Item VI-B)

Metals which are compnents of steel: chromium, copper, nickel & zinc.

Other metals can be present in trace amounts, but a not normally present nor are they tested tested for, (ie. lead)

B. Are your operations such that your raw materials, processes, or products can reasonably be expected to vary so that your discharge of pollutants may during the next 5 years exceed two times the maximum values reported in Item V?

☐ Yes (Complete Item VI-C) ☒ No (Go to Item VII)

C. If you answered "Yes" to Item VI-B, explain below and describe in detail to the best of your ability at this time the sources and expected levels of such pollutants which you anticipate will be discharged from each outfall over the next 5 years. Continue on additional sheets if you need more space.

NA

VII. BIOLOGICAL TOXICITY TESTING DATA

Do you have any knowledge of or reason to believe that any biological test for acute or chronic toxicity has been made on any of your discharges or on a receiving water in relation to your discharge within the last 3 years?

☒ Yes (Identify the test(s) and describe their purposes below) ☐ No (Go to Section VIII)

These test are conducted quarterly for Outfall 001, with the last results received April 7, 2003. The 48-Hour Acute Toxicity Test conducted 4/3/03-4/5/03 are Grab !3 TUa < 1.3/Grab TUa<1.3 for the Ceriodaphnia dubia. Therefore, this is a passing test. Results are on file.

VIII. CONTRACT ANALYSIS INFORMATION

Were any of the analyses reported in Item V performed by a contract laboratory or consulting firm?

☒ Yes (list the name, address, and telephone number of, and pollutants analyzed by each such laboratory or firm below) ☐ No (Go to Section IX)

NAME	ADDRESS	TELEPHONE (Area code & number)	POLLUTANTS ANALYZED (list)
Analytical Industries Inc.	P.O. Box 3327 Paducah, KY 42002-3327	(270) 821-7375	All Test, Please see Attachments for Section V.

IX. CERTIFICATION

I certify under penalty of law that this document and all attachments were prepared under my direction or supervision in accordance with a system designed to assure that qualified personnel properly gather and evaluate the information submitted. Based on my inquiry of the person or persons who manage the system, or those persons directly responsible for gathering the information, the information submitted is, to the best of my knowledge and belief, true, accurate, and complete. I am aware that there are significant penalties for submitting false information, including the possibility of fine and imprisonment for knowing violations.

NAME AND OFFICIAL TITLE (type or print):	TELEPHONE NUMBER (area code and number):
Mark Quiring, Plant Manager	(270) 395-3105
SIGNATURE Mark Q	DATE 9/18/03

PLEASE PRINT OR TYPE IN THE UNSHADED AREAS ONLY. You may report some or all of this information on separate sheets (use the same format) instead of completing these pages. (See instructions)

V. INTAKE AND EFFLUENT CHARACTERISTICS (Continued from page 3 of Form C) — **OUTFALL NO.** 001

Part A – You must provide the results of at least one analysis for every pollutant in this table. Complete one table for each outfall. See instructions for additional details.

1. POLLUTANT	2. EFFLUENT a. Maximum Daily Value (1) Concentration	2. EFFLUENT a. Maximum Daily Value (2) Mass	2. EFFLUENT b. Maximum 30-Day Value (if available) (1) Concentration	2. EFFLUENT b. Maximum 30-Day Value (if available) (2) Mass	2. EFFLUENT c. Long-Term Avg. Value (if available) (1) Concentration	2. EFFLUENT c. Long-Term Avg. Value (if available) (2) Mass	2. EFFLUENT d. No. of Analyses	3. UNITS (specify if blank) a. Concentration	3. UNITS (specify if blank) b. Mass	4. INTAKE (optional) a. Long-Term Avg. Value (1) Concentration	4. INTAKE (optional) a. Long-Term Avg. Value (2) Mass	4. INTAKE (optional) b. No of Analyses
a. Biochemical Oxygen Demand (BOD)	8.0	18.09					1	mg/L	lbs	NA	NA	NA
b. Chemical Oxygen Demand (COD)	69.0	156.03					1	mg/L	lbs			
c. Total Organic Carbon (TOC)	39.0	88.19					1	mg/L	lbs			
d. Total Suspended Solids (TSS)	34.0	76.89			10.9	9.19	15	mg/L	lbs			
e. Ammonia (as N)	<0.10	NA					1	mg/L	lbs			
f. Flow (in units of MGD)	VALUE 0.271		VALUE		VALUE 0.101		15	MGD		VALUE		
g. Temperature (winter)	VALUE 3.89		VALUE		VALUE 6.38		4	°c		VALUE		
h. Temperature (summer)	VALUE 28.89		VALUE		VALUE 28.05		4	°c		VALUE		
i. pH	MINIMUM 5.9	MAXIMUM 7.5	MINIMUM	MAXIMUM			15	STANDARD UNITS				

Part B - In the MARK "X" column, place an "X" in the Believed Present column for each pollutant you know or have reason to believe is present. Place an "X" in the Believed Absent column for each pollutant you believe to be absent. If you mark the Believed Present column for any pollutant, you must provide the results of at least one analysis for that pollutant. Complete one table for each outfall. See the instructions for additional details and requirements.

1. POLLUTANT AND CAS NO. (if available)	2. MARK "X"		3. EFFLUENT							4. UNITS		6. INTAKE (optional)		
	a. Believed Present	b. Believed Absent	a. Maximum Daily Value		b. Maximum 30-Day Value (if available)		c. Long-Term Avg. Value (if available)		d. No. of Analyses	a. Concentration	b. Mass	a. Long-Term Avg Value		b. No. of Analyses
			(1) Concentration	(2) Mass	(1) Concentration	(2) Mass	(1) Concentration	(2) Mass				(1) Concentration	(2) Mass	
a. Bromide (24959-67-9)	X		<10.0	NA					1	mg/L	lbs			
b. Bromine Total Residual		X												
c. Chloride	X		72.0	162.82					1	mg/L	lbs			
d. Chlorine, Total Residual	X		0.23	0.52					1	mg/L	lbs			
e. Color	X		-						1	mg/L	lbs			
f. Fecal Coliform		X												
g. Fluoride (16984-48-8)		X												
h. Hardness (as $CaCO_3$)	X		173.0	339.25			107.3	90.43	15	mg/L	lbs			
i. Nitrate – Nitrite (as N)		X												
j. Nitrogen, Total Organic (as N)		X												
k. Oil and Grease	X		<10.0	NA			NA		15	mg/L	lbs			
l. Phosphorous (as P), Total 7723-14-0		X												
m. Radioactivity														
(1) Alpha, Total		X												
(2) Beta, Total		X												
(3) Radium Total		X												
(4) Radium, 226, Total		X												

Part B - Continued

1. POLLUTANT And CAS NO. (if available)	2. MARK "X"		3. EFFLUENT							4. UNITS		5. INTAKE (optional)		
	a. Believed Present	b. Believed Absent	a. Maximum Daily Value (1) Concentration	a. Maximum Daily Value (2) Mass	b. Maximum 30-Day Value (if available) (1) Concentration	b. Maximum 30-Day Value (if available) (2) Mass	c. Long-Term Avg. Value (if available) (1) Concentration	c. Long-Term Avg. Value (if available) (2) Mass	d. No. of Analyses	a. Concentration	b. Mass	a. Long-Term Avg. Value (1) Concentration	a. Long-Term Avg. Value (2) Mass	b. No. of Analyses
n. Sulfate (as SO_4) (14808-79-8)		X												
o. Sulfide (as S)		X												
p. Sulfite (as SO_4) (14286-46-3)		X												
q. Surfactants		X												
r. Aluminum, Total (7429-90)		X												
s. Barium, Total (7440-39-3)		X												
t. Boron, Total (7440-42-8)		X												
u. Cobalt, Total (7440-48-4)		X												
v. Iron, Total (7439-89-6)	X		1.53	3.46					1	mg/L	lbs			
w. Magnesium Total (7439-96-4)		X												
x. Molybdenum Total (7439-98-7)	X		0.228	0.52					1	mg/L	lbs			
y. Manganese, Total (7439-96-6)	X		0.216	0.49					1	mg/L	lbs			
z. Tin, Total (7440-31-5)		X												
aa. Titanium, Total (7440-32-6)		X												

Part C – If you are a primary industry and this outfall contains process wastewater, refer to Table C-2 in the instructions to determine which of the GC/MS fractions you must test for. Mark "X" in the **Testing Required** column for all such GC/MS fractions that apply to your industry and for ALL toxic metals, cyanides, and total phenols. If you are not required to mark this column (secondary industries, nonprocess wastewater outfalls, and non-required GC/MS fractions), mark "X" in the **Believed Present** column for each pollutant you know or have reason to believe is present. Mark "X: in the **Believed Absent** column for each pollutant you believe to be absent. If you mark either the **Testing Required** or **Believed Present** columns for any pollutant, you must provide the result of at least one analysis for that pollutant. Note that there are seven pages to this part; please review each carefully. Complete one table (all seven pages) for each outfall. See instructions for additional details and requirements.

1. POLLUTANT And CAS NO. (if available)	2. MARK "X"			3. EFFLUENT							4. UNITS		5. INTAKE (optional)		
	a. Testing Required	a. Believed Present	b. Believed Absent	a. Maximum Daily Value		b. Maximum 30-Day Value (if available)		c. Long-Term Avg. Value (if available)		d. No. of Analyses	a. Concentration	b. Mass	a. Long-Term Avg Value		b. No. of Analyses
				(1) Concentration	(2) Mass	(1) Concentration	(2) Mass	(1) Concentration	(2) Mass				(1) Concentration	(2) Mass	
METALS, CYANIDE AND TOTAL PHENOLS															
1M. Antimony Total (7440-36-0)	X			<0.020	NA			NA		4	mg/L	lbs			
2M. Arsenic, Total (7440-38-2)	X			0.01	0.025			NA		4	mg/L	lbs			
3M. Beryllium Total (7440-41-7)	X			<0.002	NA			NA		4	mg/L	lbs			
4M. Cadmium Total (7440-43-9)	X			<0.002	NA			NA		4	mg/L	lbs			
5M. Chromium Total (7440-43-9)	X			0.024	0.006			NA		4	mg/L	lbs			
6M. Copper Total (7550-50-8)	X			0.008	NA			NA		4	mg/L	lbs			
7M. Lead Total (7439-92-1)	X			0.009	0.020			NA		4	mg/L	lbs			
8M. Mercury Total (7439-97-6)	X			0.002	0.001			NA		4	mg/L	lbs			
9M. Nickel, Total (7440-02-0)	X			0.031	0.008			NA		4	mg/L	lbs			
10M. Selenium, Total (7782-49-2)	X			<0.020	NA			NA		4	mg/L	lbs			
11M. Silver, Total (7440-28-0)	X			<0.020	NA			NA		4	mg/L	lbs			

Part C – Continued

1. POLLUTANT And CAS NO. (if available)	2. MARK "X" a. Testing Required	a. Believed Present	b. Believed Absent	3. EFFLUENT a. Maximum Daily Value (1) Concentration	(2) Mass	b. Maximum 30-Day Value (if available) (1) Concentration	(2) Mass	c. Long-Term Avg. Value (if available) (1) Concentration	(2) Mass	d. No. of Analyses	4. UNITS a. Concentration	b. Mass	5. INTAKE (optional) a. Long-Term Avg Value (1) Concentration	(2) Mass	b. No. of Analyses
METALS, CYANIDE AND TOTAL PHENOLS (Continued)															
12M. Thallium, Total (7440-28-0)	X			<0.020	NA			NA		4	mg/L	lbs			
13M. Zinc, Total (7440-66-6)	X			0.01	0.023			NA		4	mg/L	lbs			
14M. Cyanide, Total (57-12-5)	X			<0.01	NA					1	mg/L	lbs			
15M. Phenols, Total	X			<0.05	NA					1	mg/L	lbs			
DIOXIN															
2,3,7,8 Tetra-chlorodibenzo, P, Dioxin (1784-01-6)			X	DESCRIBE RESULTS:											
GC/MS FRACTION – VOLATILE COMPOUNDS															
1V. Acrolein (107-02-8)	X		BDL	NA						1	ug/L	lbs			
2V. Acrylonitrile (107-13-1)	X		BDL	NA						1	ug/L	lbs			
3V. Benzene (71-43-2)	X		<5.0	NA						1	ug/L	lbs			
5V. Bromoform (75-25-2)	X		<5.0	NA						1	ug/L	lbs			
6V. Carbon Tetrachloride (56-23-5)	X		<5.0	NA						1	ug/L	lbs			
7V. Chloro-benzene (108-90-7)	X		<5.0	NA						1	ug/L	lbs			
8V. Chlorodibro-momethane (124-48-1)	X		<5.0	NA						1	ug/L	lbs			

Part C – Continued

1. POLLUTANT And CAS NO. (if available)	2. MARK "X"			3. EFFLUENT							4. UNITS		5. INTAKE (optional)		
	a. Testing Required	a. Believed Present	b. Believed Absent	a. Maximum Daily Value		b. Maximum 30-Day Value (if available)		c. Long-Term Avg. Value (if available)		d. No. of Analyses	a. Concentration	b. Mass	a. Long-Term Avg Value		b. No. of Analyses
				(1) Concentration	(2) Mass	(1) Concentration	(2) Mass	(1) Concentration	(2) Mass				(1) Concentration	(2) Mass	
9V. Chloroethane (74-00-3)	X			<10.0	NA					1	ug/L	lbs			
10V. 2-Chloro-ethylvinyl Ether (110-75-8)	X			<5.0	NA					1	ug/L	lbs			
11V. Chloroform (67-66-3)	X			<5.0	NA					1	ug/L	lbs			
12V. Dichloro-bromomethane (75-71-8)	X			<5.0	NA					1	ug/L	lbs			
14V. 1,1-Dichloroethane (75-34-3)	X			<5.0	NA					1	ug/L	lbs			
15V. 1,2-Dichloroethane (107-06-2)	X			<5.0	NA					1	ug/L	lbs			
16V. 1,1-Dichlorethylene (75-35-4)	X			<5.0	NA					1	ug/L	lbs			
17V. 1,2-Di-chloropropane (78-87-5)	X			<5.0	NA					1	ug/L	lbs			
18V. 1,3-Dichloropro-pylene (452-75-6)	X			<5.0	NA					1	ug/L	lbs			
19V. Ethyl-benzene (100-41-4)	X			<5.0	NA					1	ug/L	lbs			
20V. Methyl Bromide (74-83-9)	X			<10.0	NA					1	ug/L	lbs			

Part C – Continued

1. POLLUTANT And CAS NO. (if available)	2. MARK "X"			3. EFFLUENT							4. UNITS		5. INTAKE (optional)		
	a. Testing Required	a. Believed Present	b. Believed Absent	a. Maximum Daily Value		b. Maximum 30-Day Value (if available)		c. Long-Term Avg. Value (if available)		d. No. of Analyses	a. Concentration	b. Mass	a. Long-Term Avg. Value		b. No. of Analyses
				(1) Concentration	(2) Mass	(1) Concentration	(2) Mass	(1) Concentration	(2) Mass				(1) Concentration	(2) Mass	
21V. Methyl Chloride (74-87-3)	X			<10.0	NA					1	ug/L	lbs			
22V. Methylene Chloride (75-00-2)	X			<5.0	NA					1	ug/L	lbs			
23V. 1,1,2,2-Tetrachloro-ethane (79-34-5)	X			<5.0	NA					1	ug/L	lbs			
24V. Tetrachloro-ethylene (127-18-4)	X			<5.0	NA					1	ug/L	lbs			
25V. Toluene (108-88-3)	X			<5.0	NA					1	ug/L	lbs			
26V. 1,2-Trans-Dichloro-ethylene (156-60-5)	X			<5.0	NA					1	ug/L	lbs			
27V. 1,1,1-Tri-chloroethane (71-55-6)	X			<5.0	NA					1	ug/L	lbs			
28V. 1,1,2-Tri-chloroethane (79-00-5)	X			<5.0	NA					1	ug/L	lbs			
29V. Trichloro-ethylene (79-01-6)	X			<5.0	NA					1	ug/L	lbs			
30V. Vinyl Chloride (75-01-4)	X			<10.0	NA					1	ug/L	lbs			

Part C – Continued

1. POLLUTANT And CAS NO. (if available)	2. MARK "X"			3. EFFLUENT							4. UNITS		5. INTAKE (optional)		
	a. Testing Required	a. Believed Present	b. Believed Absent	a. Maximum Daily Value		b. Maximum 30-Day Value (if available)		c. Long-Term Avg. Value (if available)		d. No. of Analyses	a. Concentration	b. Mass	a. Long-Term Avg Value		b. No. of Analyses
				(1) Concentration	(2) Mass	(1) Concentration	(2) Mass	(1) Concentration	(2) Mass				(1) Concentration	(2) Mass	
GC/MS FRACTION – ACID COMPOUNDS															
1A. 2-Chloro-phenol (95-57-8)	X			<50.0	NA					1	ug/L	lbs			
2A. 2,4-Dichlor-Orophenol (120-83-2)	X			<50.0	NA					1	ug/L	lbs			
3A. 2,4-Dimeth-ylphenol (105-67-9)	X			<50.0	NA					1	ug/L	lbs			
4A. 4,6-Dinitro-o-cresol (534-52-1)	X			<50.0	NA					1	ug/L	lbs			
5A. 2,4-Dinitro-phenol (51-28-5)	X			<50.0	NA					1	ug/L	lbs			
6A. 2-Nitro-phenol (88-75-5)	X			<50.0	NA					1	ug/L	lbs			
7A. 4-Nitro-phenol (100-02-7)	X			<50.0	NA					1	ug/L	lbs			
8A. P-chloro-m-cresol (59-50-7)	X			<50.0	NA					1	ug/L	lbs			
9A. Pentachloro-phenol (87-88-5)	X			<50.0	NA					1	ug/L	lbs			
10A. Phenol (108-05-2)	X			<50.0	NA					1	ug/L	lbs			
11A. 2,4,6-Tri-chlorophenol (88-06-2)	X			<50.0	NA					1	ug/L	lbs			
GC/MS FRACTION – BASE/NEUTRAL COMPOUNDS															
1B. Acena-phthene (83-32-9)	X			<10.0	NA					1	ug/L	lbs			

Part C – Continued

1. POLLUTANT And CAS NO. (if available)	2. MARK "X"			3. EFFLUENT							4. UNITS		5. INTAKE (optional)		
	a. Testing Required	a. Believed Present	b. Believed Absent	a. Maximum Daily Value		b. Maximum 30-Day Value (if available)		c. Long-Term Avg. Value (if available)		d. No. of Analyses	a. Concentration	b. Mass	a. Long-Term Avg Value		b. No. of Analyses
				(1) Concentration	(2) Mass	(1) Concentration	(2) Mass	(1) Concentration	(2) Mass				(1) Concentration	(2) Mass	
GC/MS FRACTION – BASE/NEUTRAL COMPOUNDS (Continued)															
2B. Acenaphtylene (208-96-8)	X			<10.0						1	ug/L	lbs			
3B. Anthracene (120-12-7)	X			<10.0						1	ug/L	lbs			
4B. Benzidine (92-87-5)	X			<50.0						1	ug/L	lbs			
5B. Benzo(a)-anthracene (56-55-3)	X			<10.0						1	ug/L	lbs			
6B. Benzo(a)-pyrene (50-32-8)	X			<10.0						1	ug/L	lbs			
7B. 3,4-Benzo-fluoranthene (205-99-2)	X			<10.0						1	ug/L	lbs			
8B. Benzo(ghl) perylene (191-24-2)	X			<10.0						1	ug/L	lbs			
9B. Benzo(k)-fluoranthene (207-08-9)	X			<10.0						1	ug/L	lbs			
10B. Bis(2-chlor-oethoxy)-methane (111-91-1)	X			<10.0						1	ug/L	lbs			
11B. Bis (2-chlor-oisopropyl)-Ether	X			<10.0						1	ug/L	lbs			
12B. Bis (2-ethyl-hexyl)-phthalate (117-81-7)	X			<10.0						1	ug/L	lbs			

Part C – Continued

1. POLLUTANT And CAS NO. (if available)	2. MARK "X"			3. EFFLUENT							4. UNITS		5. INTAKE (optional)		
	a. Testing Required	a. Believed Present	b. Believed Absent	a. Maximum Daily Value		b. Maximum 30-Day Value (if available)		c. Long-Term Avg. Value (if available)		d. No. of Analyses	a. Concentration	b. Mass	a. Long-Term Avg Value		b. No. of Analyses
				(1) Concentration	(2) Mass	(1) Concentration	(2) Mass	(1) Concentration	(2) Mass				(1) Concentration	(2) Mass	
GC/MS FRACTION – BASE/NEUTRAL COMPOUNDS (Continued)															
13B. 4-Bromo-phenyl Phenyl ether (101-55-3)	X			<10.0	NA					1	ug/L	lbs			
14B. Butyl-benzyl phthalate (85-68-7)	X			<10.0	NA					1	ug/L	lbs			
15B. 2-Chloro-naphthalene (7005-72-3)	X			<10.0	NA					1	ug/L	lbs			
16B. 4-Chloro-phenyl phenyl ether (7005-72-3)	X			<10.0	NA					1	ug/L	lbs			
17B. Chrysene (218-01-9)	X			<10.0	NA					1	ug/L	lbs			
18B. Dibenzo-(a,h) Anthracene (53-70-3)	X			<10.0	NA					1	ug/L	lbs			
19B. 1,2-Dichloro-benzene (95-50-1)	X			<10.0	NA					1	ug/L	lbs			
20B. 1,3-Dichloro-Benzene (541-73-1)	X			<10.0	NA					1	ug/L	lbs			
21B. 1,4-Dichloro-benzene (106-46-7)	X			<10.0	NA					1	ug/L	lbs			
22B. 3,3-Dichloro-benzidene (91-94-1)	X			<50.0	NA					1	ug/L	lbs			
23B. Diethyl Phthalate (84-66-2)	X			<10.0	NA					1	ug/L	lbs			

Part C – Continued

1. POLLUTANT And CAS NO. (if available)	2. MARK "X"			3. EFFLUENT							4. UNITS		5. INTAKE (optional)		
	a. Testing Required	a. Believed Present	b. Believed Absent	a. Maximum Daily Value		b. Maximum 30-Day Value (if available)		c. Long-Term Avg. Value (if available)		d. No. of Analyses	a. Concentration	b. Mass	a. Long-Term Avg. Value		b. No. of Analyses
				(1) Concentration	(2) Mass	(1) Concentration	(2) Mass	(1) Concentration	(2) Mass				(1) Concentration	(2) Mass	
GC/MS FRACTION – BASE/NEUTRAL COMPOUNDS (Continued)															
24B. Dimethyl Phthalate (131-11-3)	X			<10.0						1	ug/L	lbs			
25B. Di-N-butyl Phthalate (84-74-2)	X			<10.0						1	ug/L	lbs			
26B. 2,4-Dinitro-toluene (121-14-2)	X			<10.0						1	ug/L	lbs			
27B. 2,6-Dinitro-toluene (606-20-2)	X			<10.0						1	ug/L	lbs			
28B. Di-n-octyl Phthalate (117-84-0)	X			<10.0						1	ug/L	lbs			
29B. 1,2-diphenyl-hydrazine (as azonbenzene) (122-66-7)	X			<10.0						1	ug/L	lbs			
30B. Fluoranthene (208-44-0)	X			<10.0						1	ug/L	lbs			
31B. Fluorene (86-73-7)	X			<10.0						1	ug/L	lbs			
32B. Hexachloro-benzene (118-71-1)	X			<10.0						1	ug/L	lbs			
33B. Hexachloro-butadiene (87-68-3)	X			<10.0						1	ug/L	lbs			
34B. Hexachloro-cyclopenta-diene (77-47-4)	X			<10.0						1	ug/L	lbs			

Part C – Continued

1. POLLUTANT And CAS NO. (if available)	2. MARK "X"			3. EFFLUENT							4. UNITS		5. INTAKE (optional)		
	a. Testing Required	a. Believed Present	b. Believed Absent	a. Maximum Daily Value		b. Maximum 30-Day Value (if available)		c. Long-Term Avg. Value (if available)		d. No. of Analyses	a. Concentration	b. Mass	a. Long-Term Avg Value		b. No. of Analyses
				(1) Concentration	(2) Mass	(1) Concentration	(2) Mass	(1) Concentration	(2) Mass				(1) Concentration	(2) Mass	
GC/MS FRACTION – BASE/NEUTRAL COMPOUNDS (Continued)															
35B. Hexachloroethane (67-72-1)	X			<10.0						1	ug/L	lbs			
36B. Indneo-(1,2,3-oc)-Pyrene (193-39-5)	X			<10.0						1	ug/L	lbs			
37B. Isophorone (78-59-1)	X			<10.0						1	ug/L	lbs			
38B. Napthalene (91-20-3)	X			<10.0						1	ug/L	lbs			
39B. Nitrobenzene (98-95-3)	X			<10.0						1	ug/L	lbs			
40B. N-Nitrosodimethylamine (62-75-9)	X			<10.0						1	ug/L	lbs			
41B. N-nitrosodi-n-propylamine (621-64-7)	X			<10.0						1	ug/L	lbs			
42B. N-nitrosodiphenylamine (86-30-6)	X			<10.0						1	ug/L	lbs			
43B. Phenanthrene (85-01-8)	X			<10.0						1	ug/L	lbs			
44B. Pyrene (129-00-0)	X			<10.0						1	ug/L	lbs			
45B. 1,2,4 Trichlorobenzene (120-82-1)	X			<10.0						1	ug/L	lbs			

Part C – Continued

1. POLLUTANT And CAS NO. (if available)	2. MARK "X"			3. EFFLUENT							4. UNITS		5. INTAKE (optional)		
	a. Testing Required	a. Believed Present	b. Believed Absent	a. Maximum Daily Value		b. Maximum 30-Day Value (if available)		c. Long-Term Avg. Value (if available)		d. No. of Analyses	a. Concentration	b. Mass	a. Long-Term Avg. Value		b. No. of Analyses
				(1) Concentration	(2) Mass	(1) Concentration	(2) Mass	(1) Concentration	(2) Mass				(1) Concentration	(2) Mass	
GC/MS FRACTION – PESTICIDES															
1P. Aldrin (309-00-2)			X												
2P. α-BHC (319-84-6)			X												
3P. β-BHC (58-89-9)			X												
4P. gamma-BHC (58-89-9)			X												
5P. δ-BHC (319-86-8)			X												
6P. Chlordane (57-74-9)			X												
7P. 4,4'-DDT (50-29-3)			X												
8P. 4,4'-DDE (72-55-9)			X												
9P. 4,4'-DDD (72-54-8)			X												
10P. Dieldrin (60-57-1)			X												
11P. α-Endosulfan (115-29-7)			X												
12P. β-Endosulfan (115-29-7)			X												
13P. Endosulfan Sulfate (1031-07-8)			X												
14P. Endrin (72-20-8)			X												

Part C – Continued

1. POLLUTANT And CAS NO. (if available)	2. MARK "X"			3. EFFLUENT							4. UNITS		5. INTAKE (optional)		
	a. Testing Required	a. Believed Present	b. Believed Absent	a. Maximum Daily Value		b. Maximum 30-Day Value (if available)		c. Long-Term Avg. Value (if available)		d. No. of Analyses	a. Concentration	b. Mass	a. Long-Term Avg Value		b. No. of Analyses
				(1) Concentration	(2) Mass	(1) Concentration	(2) Mass	(1) Concentration	(2) Mass				(1) Concentration	(2) Mass	
GC/MS FRACTION – PESTICIDES															
15P. Endrin Aldehyde (7421-93-4)			X												
16P Heptachlor (76-44-8)			X												
17P. Heptaclor Epoxide (1024-57-3)			X												
18P. PCB-1242 (53469-21-9)			X												
19P. PCB-1254 (11097-69-1)			X												
20P. PCB-1221 (11104-28-2)			X												
21P. PCB-1232 (11141-16-5)			X												
22P. PCB-1248 (12672-29-6)			X												
23P. PCB-1260 (11096-82-5)			X												
24P. PCB-1016 (12674-11-2)			X												
25P. Toxaphene (8001-35-2)			X												

PLEASE PRINT OR TYPE IN THE UNSHADED AREAS ONLY. You may report some or all of this information on separate sheets (use the same format) instead of completing these pages. (See instructions)

V. INTAKE AND EFFLUENT CHARACTERISTICS (Continued from page 3 of Form C) — OUTFALL NO. 002

Part A – You must provide the results of at least one analysis for every pollutant in this table. Complete one table for each outfall. See instructions for additional details.

1. POLLUTANT	2. EFFLUENT a. Maximum Daily Value (1) Concentration	2. EFFLUENT a. Maximum Daily Value (2) Mass	2. EFFLUENT b. Maximum 30-Day Value (if available) (1) Concentration	2. EFFLUENT b. Maximum 30-Day Value (if available) (2) Mass	2. EFFLUENT c. Long-Term Avg. Value (if available) (1) Concentration	2. EFFLUENT c. Long-Term Avg. Value (if available) (2) Mass	2. EFFLUENT d. No. of Analyses	3. UNITS (specify if blank) a. Concentration	3. UNITS (specify if blank) b. Mass	4. INTAKE (optional) a. Long-Term Avg. Value (1) Concentration	4. INTAKE (optional) a. Long-Term Avg. Value (2) Mass	4. INTAKE (optional) b. No of Analyses
a. Biochemical Oxygen Demand (BOD)	6.0	0.009			1.3	0.002	12	mg/l	lbs	NA	NA	NA
b. Chemical Oxygen Demand (COD)	12.0	0.024					1	mg/l	lbs			
c. Total Organic Carbon (TOC)	24.0	0.048					1	mg/l	lbs			
d. Total Suspended Solids (TSS)	63	0.095			6.2	0.009	12	mg/l	lbs			
e. Ammonia (as N)	0.33	0.001			0.06	0.0001	12	mg/l	lbs			
f. Flow (in units of MGD)	VALUE	0.00024	VALUE		VALUE	0.00018	12		MGD	VALUE		
g. Temperature (winter)	VALUE	8.89	VALUE		VALUE	7.05	3		°c	VALUE		
h. Temperature (summer)	VALUE	31.11	VALUE		VALUE	27.39	3		°c	VALUE		
i. pH	MINIMUM 6.0	MAXIMUM 7.2	MINIMUM	MAXIMUM			12	STANDARD UNITS				

Part B - In the MARK "X" column, place an "X" in the Believed Present column for each pollutant you know or have reason to believe is present. Place an "X" in the Believed Absent column for each pollutant you believe to be absent. If you mark the Believed Present column for any pollutant, you must provide the results of at least one analysis for that pollutant. Complete one table for each outfall. See the instructions for additional details and requirements.

1. POLLUTANT AND CAS NO. (if available)	2. MARK "X" a. Believed Present	2. MARK "X" b. Believed Absent	3. EFFLUENT a. Maximum Daily Value (1) Concentration	a. Maximum Daily Value (2) Mass	b. Maximum 30-Day Value (if available) (1) Concentration	b. Maximum 30-Day Value (2) Mass	c. Long-Term Avg. Value (if available) (1) Concentration	c. Long-Term Avg. Value (2) Mass	d. No. of Analyses	4. UNITS a. Concentration	4. UNITS b. Mass	6. INTAKE (optional) a. Long-Term Avg Value (1) Concentration	a. Long-Term Avg Value (2) Mass	b. No. of Analyses
a. Bromide (24959-67-9)		X												
b. Bromine Total Residual		X												
c. Chloride	X		91	0.18					1	mg/L	lbs	NA		
d. Chlorine, Total Residual		X												
e. Color		X												
f. Fecal Coliform	X		<10.0	NA			<10.0	NA	12	CFU/100 mL	lbs	NA		
g. Fluoride (16984-48-8)		X												
h. Hardness (as $CaCO_3$)	X		170.0	0.34					1	mg/L	lbs	NA		
i. Nitrate – Nitrite (as N)		X												
j. Nitrogen, Total Organic (as N)		X												
k. Oil and Grease		X												
l. Phosphorous (as P), Total 7723-14-0		X												
m. Radioactivity														
(1) Alpha, Total		X												
(2) Beta, Total		X												
(3) Radium Total		X												
(4) Radium, 226, Total		X												

Part B - Continued

1. POLLUTANT And CAS NO. (if available)	2. MARK "X"		3. EFFLUENT							4. UNITS		5. INTAKE (optional)		
	a. Believed Present	b. Believed Absent	a. Maximum Daily Value (1) Concentration	a. Maximum Daily Value (2) Mass	b. Maximum 30-Day Value (if available) (1) Concentration	b. Maximum 30-Day Value (if available) (2) Mass	c. Long-Term Avg. Value (if available) (1) Concentration	c. Long-Term Avg. Value (if available) (2) Mass	d. No. of Analyses	a. Concentration	b. Mass	a. Long-Term Avg. Value (1) Concentration	a. Long-Term Avg. Value (2) Mass	b. No. of Analyses
n. Sulfate (as SO_4) (14808-79-8)		X												
o. Sulfide (as S)		X												
p. Sulfite (as SO_4) (14286-46-3)		X												
q. Surfactants		X												
r. Aluminum, Total (7429-90)		X												
s. Barium, Total (7440-39-3)		X												
t. Boron, Total (7440-42-8)		X												
u. Cobalt, Total (7440-48-4)		X												
v. Iron, Total (7439-89-6)	X		0.054	0.0001					1	mgL	lbs	NA		
w. Magnesium Total (7439-96-4)		X												
x. Molybdenum Total (7439-98-7)		X												
y. Manganese, Total (7439-96-6)	X		0.013	.00003					1	mg/L	lbs	NA		
z. Tin, Total (7440-31-5)		X												
aa. Titanium, Total (7440-32-6)		X												

Part C – If you are a primary industry and this outfall contains process wastewater, refer to Table C-2 in the instructions to determine which of the GC/MS fractions you must test for. Mark "X" in the **Testing Required** column for all such GC/MS fractions that apply to your industry and for ALL toxic metals, cyanides, and total phenols. If you are not required to mark this column (secondary industries, nonprocess wastewater outfalls, and non-required GC/MS fractions), mark "X" in the **Believed Present** column for each pollutant you know or have reason to believe is present. Mark "X: in the **Believed Absent** column for each pollutant you believe to be absent. If you mark either the **Testing Required** or **Believed Present** columns for any pollutant, you must provide the result of at least one analysis for that pollutant. Note that there are seven pages to this part; please review each carefully. Complete one table (all seven pages) for each outfall. See instructions for additional details and requirements.

1. POLLUTANT And CAS NO. (if available)	2. MARK "X"			3. EFFLUENT							4. UNITS		5. INTAKE (optional)		
	a. Testing Required	a. Believed Present	b. Believed Absent	a. Maximum Daily Value (1) Concentration	a. Maximum Daily Value (2) Mass	b. Maximum 30-Day Value (if available) (1) Concentration	b. Maximum 30-Day Value (if available) (2) Mass	c. Long-Term Avg. Value (if available) (1) Concentration	c. Long-Term Avg. Value (if available) (2) Mass	d. No. of Analyses	a. Concentration	b. Mass	a. Long-Term Avg Value (1) Concentration	a. Long-Term Avg Value (2) Mass	b. No. of Analyses
METALS, CYANIDE AND TOTAL PHENOLS															
1M. Antimony Total (7440-36-0)			X												
2M. Arsenic, Total (7440-38-2)			X												
3M. Beryllium Total (7440-41-7)			X												
4M. Cadmium Total (7440-43-9)		X	<0.002	NA						1	mgL	lbs	NA		
5M. Chromium Total (7440-43-9)	X	X	0.022	.00004						1	mg/L	lbs	NA		
6M. Copper Total (7550-50-8)		X	0.015	.00003						1	mg/L	lbs	NA		
7M. Lead Total (7439-92-1)			X												
8M. Mercury Total (7439-97-6)			X												
9M. Nickel, Total (7440-02-0)		X	<0.010	NA						1	mg/L	lbs	NA		
10M. Selenium, Total (7782-49-2)			X												
11M. Silver, Total (7440-28-0)			X												

Part C – Continued

1. POLLUTANT And CAS NO. (if available)	2. MARK "X"			3. EFFLUENT							4. UNITS		5. INTAKE (optional)		
	a. Testing Required	a. Believed Present	b. Believed Absent	a. Maximum Daily Value		b. Maximum 30-Day Value (if available)		c. Long-Term Avg. Value (if available)		d. No. of Analyses	a. Concentration	b. Mass	a. Long-Term Avg Value		b. No. of Analyses
				(1) Concentration	(2) Mass	(1) Concentration	(2) Mass	(1) Concentration	(2) Mass				(1) Concentration	(2) Mass	
METALS, CYANIDE AND TOTAL PHENOLS (Continued)															
12M. Thallium, Total (7440-28-0)			X												
13M. Zinc, Total (7440-66-6)		X		0.025	.00005					1	mg/L	lbs	NA		
14M. Cyanide, Total (57-12-5)			X												
15M. Phenols, Total			X												
DIOXIN															
2,3,7,8 Tetra-chlorodibenzo, P, Dioxin (1784-01-6)			X	DESCRIBE RESULTS:											
GC/MS FRACTION – VOLATILE COMPOUNDS															
1V. Acrolein (107-02-8)			X												
2V. Acrylonitrile (107-13-1)			X												
3V. Benzene (71-43-2)			X												
5V. Bromoform (75-25-2)			X												
6V. Carbon Tetrachloride (56-23-5)			X												
7V. Chloro-benzene (108-90-7)			X												
8V. Chlorodibro-momethane (124-48-1)			X												

Part C – Continued

1. POLLUTANT And CAS NO. (if available)	2. MARK "X"			3. EFFLUENT							4. UNITS		5. INTAKE (optional)		
	a. Testing Required	a. Believed Present	b. Believed Absent	a. Maximum Daily Value		b. Maximum 30-Day Value (if available)		c. Long-Term Avg. Value (if available)		d. No. of Analyses	a. Concentration	b. Mass	a. Long-Term Avg Value		b. No. of Analyses
				(1) Concentration	(2) Mass	(1) Concentration	(2) Mass	(1) Concentration	(2) Mass				(1) Concentration	(2) Mass	
9V. Chloroethane (74-00-3)			X												
10V. 2-Chloro-ethylvinyl Ether (110-75-8)			X												
11V. Chloroform (67-66-3)			X												
12V. Dichloro-bromomethane (75-71-8)			X												
14V. 1,1-Dichloroethane (75-34-3)			X												
15V. 1,2-Dichloroethane (107-06-2)			X												
16V. 1,1-Dichlorethylene (75-35-4)			X												
17V. 1,2-Di-chloropropane (78-87-5)			X												
18V. 1,3-Dichloropro-pylene (452-75-6)			X												
19V. Ethyl-benzene (100-41-4)			X												
20V. Methyl Bromide (74-83-9)			X												

Part C – Continued

1. POLLUTANT And CAS NO. (if available)	2. MARK "X"			3. EFFLUENT							4. UNITS		5. INTAKE (optional)		
	a. Testing Required	a. Believed Present	b. Believed Absent	a. Maximum Daily Value		b. Maximum 30-Day Value (if available)		c. Long-Term Avg. Value (if available)		d. No. of Analyses	a. Concentration	b. Mass	a. Long-Term Avg. Value		b. No. of Analyses
				(1) Concentration	(2) Mass	(1) Concentration	(2) Mass	(1) Concentration	(2) Mass				(1) Concentration	(2) Mass	
21V. Methyl Chloride (74-87-3)			X												
22V. Methylene Chloride (75-00-2)			X												
23V. 1,1,2,2-Tetrachloro-ethane (79-34-5)			X												
24V. Tetrachloro-ethylene (127-18-4)			X												
25V. Toluene (108-88-3)			X												
26V. 1,2-Trans-Dichloro-ethylene (156-60-5)			X												
27V. 1,1,1-Tri-chloroethane (71-55-6)			X												
28V. 1,1,2-Tri-chloroethane (79-00-5)			X												
29V. Trichloro-ethylene (79-01-6)			X												
30V. Vinyl Chloride (75-01-4)			X												

Part C – Continued

1. POLLUTANT And CAS NO. (if available)	2. MARK "X"			3. EFFLUENT							4. UNITS		5. INTAKE (optional)		
	a. Testing Required	a. Believed Present	b. Believed Absent	a. Maximum Daily Value		b. Maximum 30-Day Value (if available)		c. Long-Term Avg. Value (if available)		d. No. of Analyses	a. Concentration	b. Mass	a. Long-Term Avg Value		b. No. of Analyses
				(1) Concentration	(2) Mass	(1) Concentration	(2) Mass	(1) Concentration	(2) Mass				(1) Concentration	(2) Mass	
GC/MS FRACTION – ACID COMPOUNDS															
1A. 2-Chloro-phenol (95-57-8)			X												
2A. 2,4-Dichlor-Orophenol (120-83-2)			X												
3A. 2,4-Dimeth-ylphenol (105-67-9)			X												
4A. 4,6-Dinitro-o-cresol (534-52-1)			X												
5A. 2,4-Dinitro-phenol (51-28-5)			X												
6A. 2-Nitro-phenol (88-75-5)			X												
7A. 4-Nitro-phenol (100-02-7)			X												
8A. P-chloro-m-cresol (59-50-7)			X												
9A. Pentachloro-phenol (87-88-5)			X												
10A. Phenol (108-05-2)			X												
11A. 2,4,6-Tri-chlorophenol (88-06-2)			X												
GC/MS FRACTION – BASE/NEUTRAL COMPOUNDS															
1B. Acena-phthene (83-32-9)			X												

Part C – Continued

1. POLLUTANT And CAS NO. (if available)	2. MARK "X"			3. EFFLUENT							4. UNITS		5. INTAKE (optional)		
	a. Testing Required	a. Believed Present	b. Believed Absent	a. Maximum Daily Value		b. Maximum 30-Day Value (if available)		c. Long-Term Avg. Value (if available)		d. No. of Analyses	a. Concentration	b. Mass	a. Long-Term Avg Value		b. No. of Analyses
				(1) Concentration	(2) Mass	(1) Concentration	(2) Mass	(1) Concentration	(2) Mass				(1) Concentration	(2) Mass	
GC/MS FRACTION – BASE/NEUTRAL COMPOUNDS (Continued)															
2B. Acenaphtylene (208-96-8)			X												
3B. Anthracene (120-12-7)			X												
4B. Benzidine (92-87-5)			X												
5B. Benzo(a)-anthracene (56-55-3)			X												
6B. Benzo(a)-pyrene (50-32-8)			X												
7B. 3,4-Benzo-fluoranthene (205-99-2)			X												
8B. Benzo(ghl) perylene (191-24-2)			X												
9B. Benzo(k)-fluoranthene (207-08-9)			X												
10B. Bis(2-chlor-oethoxy)-methane (111-91-1)			X												
11B. Bis (2-chlor-oisopropyl)-Ether			X												
12B. Bis (2-ethyl-hexyl)-phthalate (117-81-7)			X												

Part C – Continued

1. POLLUTANT And CAS NO. (if available)	2. MARK "X"			3. EFFLUENT							4. UNITS		5. INTAKE (optional)		
	a. Testing Required	a. Believed Present	b. Believed Absent	a. Maximum Daily Value		b. Maximum 30-Day Value (if available)		c. Long-Term Avg. Value (if available)		d. No. of Analyses	a. Concentration	b. Mass	a. Long-Term Avg Value		b. No. of Analyses
				(1) Concentration	(2) Mass	(1) Concentration	(2) Mass	(1) Concentration	(2) Mass				(1) Concentration	(2) Mass	
GC/MS FRACTION – BASE/NEUTRAL COMPOUNDS (Continued)															
13B. 4-Bromo-phenyl Phenyl ether (101-55-3)			X												
14B. Butyl-benzyl phthalate (85-68-7)			X												
15B. 2-Chloro-naphthalene (7005-72-3)			X												
16B. 4-Chloro-phenyl phenyl ether (7005-72-3)			X												
17B. Chrysene (218-01-9)			X												
18B. Dibenzo-(a,h) Anthracene (53-70-3)			X												
19B. 1,2-Dichloro-benzene (95-50-1)			X												
20B. 1,3-Dichloro-Benzene (541-73-1)			X												
21B. 1,4-Dichloro-benzene (106-46-7)			X												
22B. 3,3-Dichloro-benzidene (91-94-1)			X												
23B. Diethyl Phthalate (84-66-2)			X												

Part C – Continued

1. POLLUTANT And CAS NO. (if available)	2. MARK "X"			3. EFFLUENT							4. UNITS		5. INTAKE (optional)		
	a. Testing Required	a. Believed Present	b. Believed Absent	a. Maximum Daily Value		b. Maximum 30-Day Value (if available)		c. Long-Term Avg. Value (if available)		d. No. of Analyses	a. Concentration	b. Mass	a. Long-Term Avg. Value		b. No. of Analyses
				(1) Concentration	(2) Mass	(1) Concentration	(2) Mass	(1) Concentration	(2) Mass				(1) Concentration	(2) Mass	
GC/MS FRACTION – BASE/NEUTRAL COMPOUNDS (Continued)															
24B. Dimethyl Phthalate (131-11-3)			X												
25B. Di-N-butyl Phthalate (84-74-2)			X												
26B. 2,4-Dinitro-toluene (121-14-2)			X												
27B. 2,6-Dinitro-toluene (606-20-2)			X												
28B. Di-n-octyl Phthalate (117-84-0)			X												
29B. 1,2-diphenyl-hydrazine (as azonbenzene) (122-66-7)			X												
30B. Fluoranthene (208-44-0)			X												
31B. Fluorene (86-73-7)			X												
32B. Hexachloro-benzene (118-71-1)			X												
33B. Hexachloro-butadiene (87-68-3)			X												
34B. Hexachloro-cyclopenta-diene (77-47-4)			X												

Part C – Continued

1. POLLUTANT And CAS NO. (if available)	2. MARK "X"			3. EFFLUENT							4. UNITS		5. INTAKE (optional)		
	a. Testing Required	a. Believed Present	b. Believed Absent	a. Maximum Daily Value		b. Maximum 30-Day Value (if available)		c. Long-Term Avg. Value (if available)		d. No. of Analyses	a. Concentration	b. Mass	a. Long-Term Avg Value		b. No. of Analyses
				(1) Concentration	(2) Mass	(1) Concentration	(2) Mass	(1) Concentration	(2) Mass				(1) Concentration	(2) Mass	
GC/MS FRACTION – BASE/NEUTRAL COMPOUNDS (Continued)															
35B. Hexachloroethane (67-72-1)			X												
36B. Indneo-(1,2,3-oc)-Pyrene (193-39-5)			X												
37B. Isophorone (78-59-1)			X												
38B. Napthalene (91-20-3)			X												
39B. Nitrobenzene (98-95-3)			X												
40B. N-Nitrosodimethylamine (62-75-9)			X												
41B. N-nitrosodi-n-propylamine (621-64-7)			X												
42B. N-nitrosodiphenylamine (86-30-6)			X												
43B. Phenanthrene (85-01-8)			X												
44B. Pyrene (129-00-0)			X												
45B. 1,2,4 Trichlorobenzene (120-82-1)			X												

Part C – Continued

1. POLLUTANT And CAS NO. (if available)	2. MARK "X"			3. EFFLUENT							4. UNITS		5. INTAKE (optional)		
	a. Testing Required	a. Believed Present	b. Believed Absent	a. Maximum Daily Value		b. Maximum 30-Day Value (if available)		c. Long-Term Avg. Value (if available)		d. No. of Analyses	a. Concentration	b. Mass	a. Long-Term Avg. Value		b. No. of Analyses
				(1) Concentration	(2) Mass	(1) Concentration	(2) Mass	(1) Concentration	(2) Mass				(1) Concentration	(2) Mass	
GC/MS FRACTION – PESTICIDES															
1P. Aldrin (309-00-2)			X												
2P. α-BHC (319-84-6)			X												
3P. β-BHC (58-89-9)			X												
4P. gamma-BHC (58-89-9)			X												
5P. δ-BHC (319-86-8)			X												
6P. Chlordane (57-74-9)			X												
7P. 4,4'-DDT (50-29-3)			X												
8P. 4,4'-DDE (72-55-9)			X												
9P. 4,4'-DDD (72-54-8)			X												
10P. Dieldrin (60-57-1)			X												
11P. α-Endosulfan (115-29-7)			X												
12P. β-Endosulfan (115-29-7)			X												
13P. Endosulfan Sulfate (1031-07-8)			X												
14P. Endrin (72-20-8)			X												

Part C – Continued

1. POLLUTANT And CAS NO. (if available)	2. MARK "X"			3. EFFLUENT							4. UNITS		5. INTAKE (optional)		
	a. Testing Required	a. Believed Present	b. Believed Absent	a. Maximum Daily Value		b. Maximum 30-Day Value (if available)		c. Long-Term Avg. Value (if available)		d. No. of Analyses	a. Concentration	b. Mass	a. Long-Term Avg Value		b. No. of Analyses
				(1) Concentration	(2) Mass	(1) Concentration	(2) Mass	(1) Concentration	(2) Mass				(1) Concentration	(2) Mass	
GC/MS FRACTION – PESTICIDES															
15P. Endrin Aldehyde (7421-93-4)			X												
16P Heptachlor (76-44-8)			X												
17P. Heptaclor Epoxide (1024-57-3)			X												
18P. PCB-1242 (53469-21-9)			X												
19P. PCB-1254 (11097-69-1)			X												
20P. PCB-1221 (11104-28-2)			X												
21P. PCB-1232 (11141-16-5)			X												
22P. PCB-1248 (12672-29-6)			X												
23P. PCB-1260 (11096-82-5)			X												
24P. PCB-1016 (12674-11-2)			X												
25P. Toxaphene (8001-35-2)			X												

PLEASE PRINT OR TYPE IN THE UNSHADED AREAS ONLY. You may report some or all of this information on separate sheets (use the same format) instead of completing these pages. (See instructions)

V. INTAKE AND EFFLUENT CHARACTERISTICS (Continued from page 3 of Form C) OUTFALL NO. 003

Part A – You must provide the results of at least one analysis for every pollutant in this table. Complete one table for each outfall. See instructions for additional details.

1. POLLUTANT	2. EFFLUENT a. Maximum Daily Value (1) Concentration	(2) Mass	b. Maximum 30-Day Value (if available) (1) Concentration	(2) Mass	c. Long-Term Avg. Value (if available) (1) Concentration	(2) Mass	d. No. of Analyses	3. UNITS (specify if blank) a. Concentration	b. Mass	4. INTAKE (optional) a. Long-Term Avg. Value (1) Concentration	(2) Mass	b. No of Analyses
a. Biochemical Oxygen Demand (BOD)	9.0	0.526					1	mg/l	lbs	NA	NA	NA
b. Chemical Oxygen Demand (COD)	82.0	4.79					1	mg/l	lbs			
c. Total Organic Carbon (TOC)	40.0	2.336					1	mg/l	lbs			
d. Total Suspended Solids (TSS)	28	1.636			12.9	13.994	12	mg/l	lbs			
e. Ammonia (as N)	<0.01						1	mg/l	lbs			
f. Flow (in units of MGD)	VALUE	.807	VALUE		VALUE	0.130	12	MGD		VALUE		
g. Temperature (winter)	VALUE	7.2	VALUE		VALUE	6.3	3	°c		VALUE		
h. Temperature (summer)	VALUE	28.9	VALUE		VALUE	24	4	°c		VALUE		
i. pH	MINIMUM 6.0	MAXIMUM 7.1	MINIMUM	MAXIMUM			12	STANDARD UNITS				

Part B - In the MARK "X" column, place an "X" in the Believed Present column for each pollutant you know or have reason to believe is present. Place an "X" in the Believed Absent column for each pollutant you believe to be absent. If you mark the Believed Present column for any pollutant, you must provide the results of at least one analysis for that pollutant. Complete one table for each outfall. See the instructions for additional details and requirements.

1. POLLUTANT AND CAS NO. (if available)	2. MARK "X" a. Believed Present	2. MARK "X" b. Believed Absent	3. EFFLUENT a. Maximum Daily Value (1) Concentration	a. Maximum Daily Value (2) Mass	b. Maximum 30-Day Value (if available) (1) Concentration	b. Maximum 30-Day Value (2) Mass	c. Long-Term Avg. Value (if available) (1) Concentration	c. Long-Term Avg. Value (2) Mass	d. No. of Analyses	4. UNITS a. Concentration	4. UNITS b. Mass	6. INTAKE (optional) a. Long-Term Avg Value (1) Concentration	a. Long-Term Avg Value (2) Mass	b. No. of Analyses
a. Bromide (24959-67-9)		X												
b. Bromine Total Residual		X												
c. Chloride	X		87.0	5.082					1	mg/L	lbs			
d. Chlorine, Total Residual		X												
e. Color		X												
f. Fecal Coliform		X												
g. Fluoride (16984-48-8)		X												
h. Hardness (as $CaCO_3$)	X		146	23.147			96.3	104.4	12	mg/L	lbs			
i. Nitrate – Nitrite (as N)		X												
j. Nitrogen, Total Organic (as N)		X												
k. Oil and Grease	X		29	1.69			2.4	2.60	12	mg/L	lbs			
l. Phosphorous (as P), Total 7723-14-0		X												
m. Radioactivity														
(1) Alpha, Total		X												
(2) Beta, Total		X												
(3) Radium Total		X												
(4) Radium, 226, Total		X												

Part B - Continued

1. POLLUTANT And CAS NO. (if available)	2. MARK "X" a. Believed Present	2. MARK "X" b. Believed Absent	3. EFFLUENT a. Maximum Daily Value (1) Concentration	3. EFFLUENT a. Maximum Daily Value (2) Mass	3. EFFLUENT b. Maximum 30-Day Value (if available) (1) Concentration	3. EFFLUENT b. Maximum 30-Day Value (if available) (2) Mass	3. EFFLUENT c. Long-Term Avg. Value (if available) (1) Concentration	3. EFFLUENT c. Long-Term Avg. Value (if available) (2) Mass	3. EFFLUENT d. No. of Analyses	4. UNITS a. Concentration	4. UNITS b. Mass	5. INTAKE (optional) a. Long-Term Avg. Value (1) Concentration	5. INTAKE (optional) a. Long-Term Avg. Value (2) Mass	5. INTAKE (optional) b. No. of Analyses
n. Sulfate (as SO_4) (14808-79-8)		X												
o. Sulfide (as S)		X												
p. Sulfite (as SO_4) (14286-46-3)		X												
q. Surfactants		X												
r. Aluminum, Total (7429-90)		X												
s. Barium, Total (7440-39-3)		X												
t. Boron, Total (7440-42-8)		X												
u. Cobalt, Total (7440-48-4)		X												
v. Iron, Total (7439-89-6)	X		1.43	0.083					1	mg/L	lbs			
w. Magnesium Total (7439-96-4)		X												
x. Molybdenum Total (7439-98-7)	X		0.231	0.135					1	mg/L	lbs			
y. Manganese, Total (7439-96-6)	X		0.215	0.012					1	mg/L	lbs			
z. Tin, Total (7440-31-5)		X												
aa. Titanium, Total (7440-32-6)		X												

Part C – If you are a primary industry and this outfall contains process wastewater, refer to Table C-2 in the instructions to determine which of the GC/MS fractions you must test for. Mark "X" in the **Testing Required** column for all such GC/MS fractions that apply to your industry and for ALL toxic metals, cyanides, and total phenols. If you are not required to mark this column (secondary industries, nonprocess wastewater outfalls, and non-required GC/MS fractions), mark "X" in the **Believed Present** column for each pollutant you know or have reason to believe is present. Mark "X: in the **Believed Absent** column for each pollutant you believe to be absent. If you mark either the **Testing Required** or **Believed Present** columns for any pollutant, you must provide the result of at least one analysis for that pollutant. Note that there are seven pages to this part; please review each carefully. Complete one table (all seven pages) for each outfall. See instructions for additional details and requirements.

1. POLLUTANT And CAS NO. (if available)	2. MARK "X"			3. EFFLUENT							4. UNITS		5. INTAKE (optional)		
	a. Testing Required	a. Believed Present	b. Believed Absent	a. Maximum Daily Value		b. Maximum 30-Day Value (if available)		c. Long-Term Avg. Value (if available)		d. No. of Analyses	a. Concentration	b. Mass	a. Long-Term Avg Value		b. No. of Analyses
				(1) Concentration	(2) Mass	(1) Concentration	(2) Mass	(1) Concentration	(2) Mass				(1) Concentration	(2) Mass	
METALS, CYANIDE AND TOTAL PHENOLS															
1M. Antimony Total (7440-36-0)			X												
2M. Arsenic, Total (7440-38-2)			X												
3M. Beryllium Total (7440-41-7)			X												
4M. Cadmium Total (7440-43-9)		X		<0.002	NA					2	mg/L	lbs			
5M. Chromium Total (7440-43-9)			X												
6M. Copper Total (7550-50-8)		X		0.009	.0005					2	mg/L	lbs			
7M. Lead Total (7439-92-1)			X												
8M. Mercury Total (7439-97-6)			X												
9M. Nickel, Total (7440-02-0)		X		0.011	.0006					2	mg/L	lbs			
10M. Selenium, Total (7782-49-2)			X												
11M. Silver, Total (7440-28-0)			X												

Part C – Continued

1. POLLUTANT And CAS NO. (if available)	2. MARK "X"			3. EFFLUENT							4. UNITS		5. INTAKE (optional)		
	a. Testing Required	a. Believed Present	b. Believed Absent	a. Maximum Daily Value		b. Maximum 30-Day Value (if available)		c. Long-Term Avg. Value (if available)		d. No. of Analyses	a. Concentration	b. Mass	a. Long-Term Avg Value		b. No. of Analyses
				(1) Concentration	(2) Mass	(1) Concentration	(2) Mass	(1) Concentration	(2) Mass				(1) Concentration	(2) Mass	
9V. Chloroethane (74-00-3)			X												
10V. 2-Chloro-ethylvinyl Ether (110-75-8)			X												
11V. Chloroform (67-66-3)			X												
12V. Dichloro-bromomethane (75-71-8)			X												
14V. 1,1-Dichloroethane (75-34-3)			X												
15V. 1,2-Dichloroethane (107-06-2)			X												
16V. 1,1-Dichlorethylene (75-35-4)			X												
17V. 1,2-Di-chloropropane (78-87-5)			X												
18V. 1,3-Dichloropro-pylene (452-75-6)			X												
19V. Ethyl-benzene (100-41-4)			X												
20V. Methyl Bromide (74-83-9)			X												

Part C – Continued

1. POLLUTANT And CAS NO. (if available)	2. MARK "X"			3. EFFLUENT							4. UNITS		5. INTAKE (optional)		
	a. Testing Required	a. Believed Present	b. Believed Absent	a. Maximum Daily Value		b. Maximum 30-Day Value (if available)		c. Long-Term Avg. Value (if available)		d. No. of Analyses	a. Concentration	b. Mass	a. Long-Term Avg. Value		b. No. of Analyses
				(1) Concentration	(2) Mass	(1) Concentration	(2) Mass	(1) Concentration	(2) Mass				(1) Concentration	(2) Mass	
21V. Methyl Chloride (74-87-3)			X												
22V. Methylene Chloride (75-00-2)			X												
23V. 1,1,2,2-Tetrachloro-ethane (79-34-5)			X												
24V. Tetrachloro-ethylene (127-18-4)			X												
25V. Toluene (108-88-3)			X												
26V. 1,2-Trans-Dichloro-ethylene (156-60-5)			X												
27V. 1,1,1-Tri-chloroethane (71-55-6)			X												
28V. 1,1,2-Tri-chloroethane (79-00-5)			X												
29V. Trichloro-ethylene (79-01-6)			X												
30V. Vinyl Chloride (75-01-4)			X												

Part C – Continued

1. POLLUTANT And CAS NO. (if available)	2. MARK "X"			3. EFFLUENT							4. UNITS		5. INTAKE (optional)		
	a. Testing Required	a. Believed Present	b. Believed Absent	a. Maximum Daily Value		b. Maximum 30-Day Value (if available)		c. Long-Term Avg. Value (if available)		d. No. of Analyses	a. Concentration	b. Mass	a. Long-Term Avg Value		b. No. of Analyses
				(1) Concentration	(2) Mass	(1) Concentration	(2) Mass	(1) Concentration	(2) Mass				(1) Concentration	(2) Mass	
GC/MS FRACTION – ACID COMPOUNDS															
1A. 2-Chloro-phenol (95-57-8)			X												
2A. 2,4-Dichlor-Orophenol (120-83-2)			X												
3A. 2,4-Dimeth-ylphenol (105-67-9)			X												
4A. 4,6-Dinitro-o-cresol (534-52-1)			X												
5A. 2,4-Dinitro-phenol (51-28-5)			X												
6A. 2-Nitro-phenol (88-75-5)			X												
7A. 4-Nitro-phenol (100-02-7)			X												
8A. P-chloro-m-cresol (59-50-7)			X												
9A. Pentachloro-phenol (87-88-5)			X												
10A. Phenol (108-05-2)			X												
11A. 2,4,6-Tri-chlorophenol (88-06-2)			X												
GC/MS FRACTION – BASE/NEUTRAL COMPOUNDS															
1B. Acena-phthene (83-32-9)			X												

Part C – Continued

1. POLLUTANT And CAS NO. (if available)	2. MARK "X"			3. EFFLUENT							4. UNITS		5. INTAKE (optional)		
	a. Testing Required	a. Believed Present	b. Believed Absent	a. Maximum Daily Value		b. Maximum 30-Day Value (if available)		c. Long-Term Avg. Value (if available)		d. No. of Analyses	a. Concentration	b. Mass	a. Long-Term Avg Value		b. No. of Analyses
				(1) Concentration	(2) Mass	(1) Concentration	(2) Mass	(1) Concentration	(2) Mass				(1) Concentration	(2) Mass	
GC/MS FRACTION – BASE/NEUTRAL COMPOUNDS (Continued)															
2B. Acenaphtylene (208-96-8)			X												
3B. Anthracene (120-12-7)			X												
4B. Benzidine (92-87-5)			X												
5B. Benzo(a)-anthracene (56-55-3)			X												
6B. Benzo(a)-pyrene (50-32-8)			X												
7B. 3,4-Benzo-fluoranthene (205-99-2)			X												
8B. Benzo(ghl) perylene (191-24-2)			X												
9B. Benzo(k)-fluoranthene (207-08-9)			X												
10B. Bis(2-chlor-oethoxy)-methane (111-91-1)			X												
11B. Bis (2-chlor-oisopropyl)-Ether			X												
12B. Bis (2-ethyl-hexyl)-phthalate (117-81-7)			X												

Part C – Continued

1. POLLUTANT And CAS NO. (if available)	2. MARK "X"			3. EFFLUENT							4. UNITS		5. INTAKE (optional)		
	a. Testing Required	a. Believed Present	b. Believed Absent	a. Maximum Daily Value		b. Maximum 30-Day Value (if available)		c. Long-Term Avg. Value (if available)		d. No. of Analyses	a. Concentration	b. Mass	a. Long-Term Avg Value		b. No. of Analyses
				(1) Concentration	(2) Mass	(1) Concentration	(2) Mass	(1) Concentration	(2) Mass				(1) Concentration	(2) Mass	
GC/MS FRACTION – BASE/NEUTRAL COMPOUNDS (Continued)															
13B. 4-Bromo-phenyl Phenyl ether (101-55-3)			X												
14B. Butyl-benzyl phthalate (85-68-7)			X												
15B. 2-Chloro-naphthalene (7005-72-3)			X												
16B. 4-Chloro-phenyl phenyl ether (7005-72-3)			X												
17B. Chrysene (218-01-9)			X												
18B. Dibenzo-(a,h) Anthracene (53-70-3)			X												
19B. 1,2-Dichloro-benzene (95-50-1)			X												
20B. 1,3-Dichloro-Benzene (541-73-1)			X												
21B. 1,4-Dichloro-benzene (106-46-7)			X												
22B. 3,3-Dichloro-benzidene (91-94-1)			X												
23B. Diethyl Phthalate (84-66-2)			X												

Part C – Continued

1. POLLUTANT And CAS NO. (if available)	2. MARK "X"			3. EFFLUENT							4. UNITS		5. INTAKE (optional)		
	a. Testing Required	a. Believed Present	b. Believed Absent	a. Maximum Daily Value		b. Maximum 30-Day Value (if available)		c. Long-Term Avg. Value (if available)		d. No. of Analyses	a. Concentration	b. Mass	a. Long-Term Avg. Value		b. No. of Analyses
				(1) Concentration	(2) Mass	(1) Concentration	(2) Mass	(1) Concentration	(2) Mass				(1) Concentration	(2) Mass	
GC/MS FRACTION – BASE/NEUTRAL COMPOUNDS (Continued)															
24B. Dimethyl Phthalate (131-11-3)			X												
25B. Di-N-butyl Phthalate (84-74-2)			X												
26B. 2,4-Dinitro-toluene (121-14-2)			X												
27B. 2,6-Dinitro-toluene (606-20-2)			X												
28B. Di-n-octyl Phthalate (117-84-0)			X												
29B. 1,2-diphenyl-hydrazine (as azonbenzene) (122-66-7)			X												
30B. Fluoranthene (208-44-0)			X												
31B. Fluorene (86-73-7)			X												
32B. Hexachloro-benzene (118-71-1)			X												
33B. Hexachloro-butadiene (87-68-3)			X												
34B. Hexachloro-cyclopenta-diene (77-47-4)			X												

Part C – Continued

1. POLLUTANT And CAS NO. (if available)	2. MARK "X"			3. EFFLUENT							4. UNITS		5. INTAKE (optional)		
	a. Testing Required	a. Believed Present	b. Believed Absent	a. Maximum Daily Value		b. Maximum 30-Day Value (if available)		c. Long-Term Avg. Value (if available)		d. No. of Analyses	a. Concentration	b. Mass	a. Long-Term Avg Value		b. No. of Analyses
				(1) Concentration	(2) Mass	(1) Concentration	(2) Mass	(1) Concentration	(2) Mass				(1) Concentration	(2) Mass	
GC/MS FRACTION – BASE/NEUTRAL COMPOUNDS (Continued)															
35B. Hexachloroethane (67-72-1)			X												
36B. Indneo-(1,2,3-oc)-Pyrene (193-39-5)			X												
37B. Isophorone (78-59-1)			X												
38B. Napthalene (91-20-3)			X												
39B. Nitrobenzene (98-95-3)			X												
40B. N-Nitrosodimethylamine (62-75-9)			X												
41B. N-nitrosodi-n-propylamine (621-64-7)			X												
42B. N-nitrosodiphenylamine (86-30-6)			X												
43B. Phenanthrene (85-01-8)			X												
44B. Pyrene (129-00-0)			X												
45B. 1,2,4 Trichlorobenzene (120-82-1)			X												

Part C – Continued

1. POLLUTANT And CAS NO. (if available)	2. MARK "X"			3. EFFLUENT							4. UNITS		5. INTAKE (optional)		
	a. Testing Required	a. Believed Present	b. Believed Absent	a. Maximum Daily Value		b. Maximum 30-Day Value (if available)		c. Long-Term Avg. Value (if available)		d. No. of Analyses	a. Concentration	b. Mass	a. Long-Term Avg. Value		b. No. of Analyses
				(1) Concentration	(2) Mass	(1) Concentration	(2) Mass	(1) Concentration	(2) Mass				(1) Concentration	(2) Mass	
GC/MS FRACTION – PESTICIDES															
1P. Aldrin (309-00-2)			X												
2P. α-BHC (319-84-6)			X												
3P. β-BHC (58-89-9)			X												
4P. gamma-BHC (58-89-9)			X												
5P. δ-BHC (319-86-8)			X												
6P. Chlordane (57-74-9)			X												
7P. 4,4'-DDT (50-29-3)			X												
8P. 4,4'-DDE (72-55-9)			X												
9P. 4,4'-DDD (72-54-8)			X												
10P. Dieldrin (60-57-1)			X												
11P. α-Endosulfan (115-29-7)			X												
12P. β-Endosulfan (115-29-7)			X												
13P. Endosulfan Sulfate (1031-07-8)			X												
14P. Endrin (72-20-8)			X												

Part C – Continued

1. POLLUTANT And CAS NO. (if available)	2. MARK "X"			3. EFFLUENT							4. UNITS		5. INTAKE (optional)		
	a. Testing Required	a. Believed Present	b. Believed Absent	a. Maximum Daily Value		b. Maximum 30-Day Value (if available)		c. Long-Term Avg. Value (if available)		d. No. of Analyses	a. Concentration	b. Mass	a. Long-Term Avg Value		b. No. of Analyses
				(1) Concentration	(2) Mass	(1) Concentration	(2) Mass	(1) Concentration	(2) Mass				(1) Concentration	(2) Mass	
GC/MS FRACTION – PESTICIDES															
15P. Endrin Aldehyde (7421-93-4)			X												
16P Heptachlor (76-44-8)			X												
17P. Heptaclor Epoxide (1024-57-3)			X												
18P. PCB-1242 (53469-21-9)			X												
19P. PCB-1254 (11097-69-1)			X												
20P. PCB-1221 (11104-28-2)			X												
21P. PCB-1232 (11141-16-5)			X												
22P. PCB-1248 (12672-29-6)			X												
23P. PCB-1260 (11096-82-5)			X												
24P. PCB-1016 (12674-11-2)			X												
25P. Toxaphene (8001-35-2)			X												

KPDES FORM F

KENTUCKY POLLUTANT DISCHARGE ELIMINATION SYSTEM

2003 SEP 18 P 1:00

PERMIT APPLICATION

RECEIVED BY KPDES BRANCH

A complete application consists of this form and Form 1.
For additional information, Contact KPDES Branch, (502) 564-3410.

I. OUTFALL LOCATION

AGENCY USE

For each outfall list the latitude and longitude of its location to the nearest 15 seconds and name the receiving water.

A. Outfall Number	B. Latitude			C. Longitude			D. Receiving Water (name)
003	32	02	52	88	23	30	An unnamed tributary of
							Little Cypress Creek

II. IMPROVEMENTS

A. Are you now required by any federal, state, or local authority to meet any implementaiton schedule for the construction, upgrading or operation of wastewater treatment equipment or practices or any other environmental programs which may affect the discharges described in this application? This includes, but is not limited to, permit conditions, administrative or enforcement orders, enforcement compliance schedule letters, stipulations, court orders, and grant or loan conditions.

1. Identification of Conditions, Agreements, Etc.	2. Affected Outfalls No.	Source of Discharge	3. Brief Description of Project	4. Final Compliance Date a. req.	b. proj.
NA					

B. You may attach additional sheets describing any additional water pollution (or other environmental projects which may affect your discharges) you now have under way or which you plan. Indicate whether each program is now under way or planned, and indicate your actual or planned schedules for construction.

III. SITE DRAINAGE MAP

Attach a site map showing topography (or indicating the outline of drainage areas served by the outfall(s) covered in the application if a topographic map is unavailable) depicting the facility including: each of its intake and discharge structures; the drainage area of each storm water outfall; paved areas and buildings within the drainage area of each storm water outfall, each know past or present areas used for outdoor storage or disposal of significant materials, each existing structural control measure to reduce pollutants in storm water runoff, materials loading and access areas, areas where pesticides, herbicides, soil conditioners and fertilizers are applied; each of its hazardous waste treatment, storage of disposal units (including each area not required to have a RCRA permit which is used for accumulating hazardous waste under 40 CFR 262.34); each well where fluids from the facility are injected underground; springs, and other surface water bodies which receive storm water discharges from the facility. (see attachments C, D, E & F)

IV. NARRATIVE DESCRIPTION OF POLLUTANT SOURCES

A. For each outfall, provide an estimate of the area (include units) of impervious surfaces (including paved areas and building roofs) drained to the outfall, and an estimate of the total surface area drained by the outfall.

Outfall Number	Area of Impervious Surface (provide units)	Total Area Drained (provide units)	Outfall Number	Area of Impervious Surface (provide units)	Total Area Drained (provide units)
003	4.2 Acres	32.7 Acres			

B. Provide a narrative description of significant materials that are currently or in the past three years have been treated, stored or disposed in a manner to allow exposure to storm water; method of treatment, storage, or disposal; past and present materials management practices employed to minimize contact by these materials with storm water runoff; materials loading and access areas; and the location, manner, and frequency in which pesticides, herbicides, soil conditioners, and fertilizers are applied.

See Attachment J

C. For each outfall, provide the location and a description of existing structural and nonstructural control measures to reduce pollutants in storm water runoff; and a description of the treatment the storm water receives, including the schedule and type of maintenance for control and treatment measures and the ultimate disposal of any solid or fluid wastes other than by discharge.

Outfall Number	Treatment	List Codes from Table F-1
003	Vegetation is used to slow stormwater velocity in an effort to promote settling of solids. Currently no structural control measures are utilized at this outfall	1 U

V. NON-STORM WATER DISCHARGES

A. I certify under penalty of law that the outfall(s) covered by this application have been tested or evaluated for the presence of non-storm water discharges, and that all non-storm water discharges from these outfall(s) are identified in either an accompanying Form C or Form SC application for the outfall.

Name and Official Title (type or print)	Signature	Date Signed
Mark Quiring, Plant Manager	Mark Quiring	9/18/03

B. Provide a description of the method used, the date of any testing, and the onsite drainage points that were directly observed during a test.

Samples collected where done so by the method of grab samples. These samples where collected per requirements of KPDES permit KY0072231 and cover the period from September 2002 to July 2003. One additional grab sample was collected beyond the requirements of the permit in July 2003 for the purpose of this application involving Outfalls 001, 002 & 003.

VI. SIGNIFICANT LEAKS OR SPILLS

Provide existing information regarding the history of significant leaks or spills of toxic or hazardous pollutants at the facility in the last three years, including the approximate date and location of the spill or leak, and the type and amount of material released.

None

VII. DISCHARGE INFORMATION

A,B,C, & D: See instructions before proceeding. Complete one set of tables for each outfall. Annotate the outfall number in the space provided. Tables F-1, F-2, and F-3 are included on separate pages.

E: Potential discharges not covered by analysis - is any toxic pollutant listed in Table F-2, F-3, or F-4, a substance which you currently use or manufacture as an intermediate or final product or by product.

☒ Yes (list all such pollutants below) ☐ No (go to Section IX)

Those metals which have been tested for: Fe, Mo, Mn, Cr, Ni & Zn are components of steel. None of the toxic pollutants listed in Tables F-2, F-3 & F-4 are processed or used

VIII. BIOLOGICAL TOXICITY TESTING DATA

Do you have any knowledge or reason to believe that any biological test for acute or chronic toxicity has been made on any of your discharges or on a receiving water in relation to your discharge within the last 3 years?

☒ Yes (list all such results below) ☐ No (go to Section IX)

Not for Outfall 003, Testing was performed on Outfall 001 as noted in Section VII of Form C.

IX. CONTRACT ANALYSIS INFORMATION

Were any of the analyses reported in item VII performed by a contract laboratory or consulting firm?

☒ Yes (list the name, address and telephone number of, and pollutants analyzed by each such laboratory or firm below; use additional sheets if necessary).

☐ No (go to Section IX)

A. Name	B. Address	C. Area Code & Phone No.	D. Pollutants Analyzed
Analytical Industries Incorporated	P.O. Box 3327 Paducah, KY 42002-3327	(270) 898-8683	All Test

X. CERTIFICATION

I certify under penalty of law that this document and all attachments were prepared under my direction or supervision in accordance with a system designed to assure that qualified personnel properly gather and evaluate the information submitted. Based on my inquiry of the person or persons who manage the system or those persons directly responsible for gathering the information, the information submitted is, to the best of my knowledge and belief, true, accurate, and complete. I am aware that there are significant penalties for submitting false information including the possibility of fine and imprisonment for knowing violations.

NAME & OFFICIAL TITLE (type or print)	AREA CODE AND PHONE NO.
Mark Quiring, Plant Manager	(270) 395-3105
SIGNATURE	**DATE SIGNED**
Mark Quiring	9/18/03

VII. DISCHARGE INFORMATION	OUTFALL NO:

Part A - You must provide the results of at least one analysis for every pollutant in this table. Complete one table for each outfall. See instructions for additional details.

Pollutant and CAS Number (if available)	Maximum Values (include units)		Average Values (include units)		Number of Storm Events Sampled	Sources of Pollutants
	Grab Sample Taken During 1st 20 Minutes	Flow-weighted Composite	Grab Sample Taken During 1st 20 Minutes	Flow-weighted Composite		
Oil and Grease	29 mg/l	N/A	2.4 mg/l		12	Process
Biological Oxygen Demand BOD_5	9.0 mg/l		9.0 mg/l		1	Process
Chemical Oxygen Demand (COD)	82.0 mg/l		82.0 mg/l		1	Process
Total Suspended Solids (TSS)	28.0 mg/l		12.9 mg/l		12	Process
Total Kjeldahl Nitrogen	NA		NA			
Nitrate plus Nitrite Nitrogen	NA		NA			
Total Phosphorus	NA		NA			
pH	Minimum 6.0	Maximum 7.1	Minimum	Maximum	12	Process

Part B - List each pollutant that is limited in an effluent guideline which the facility is subject to or any pollutant listed in the facility's KPDES permit for its process wastewater (if the facility is operating under an existing KPDES permit). Complete one table for each outfall. See the instructions for additional details and requirements.

Pollutant and CAS Number (if available)	Maximum Values (include units)		Average Values (include units)		Number of Storm Events Sampled	Sources of Pollutants
	Grab Sample Taken During 1st 20 Minutes	Flow-weighted Composite	Grab Sample Taken During 1st 20 Minutes	Flow-weighted Composite		
Hardness (CaCO3)	146.0 mg/l		96.3 mg/l		12	Process
TSS	28.0 mg/l		12.9 mg/l		12	Process
Oil & Grease	29.0 mg/l		2.4 mg/l		12	Process
pH	7.1		6.9		12	Process
Temp	84		62.2		12	Process
DO	11.9		7.7		12	Process
Silver, Total	<0.020		<0.020		1	Component of steel
Arsenic, Total	0.010		0.010		1	Component of steel
Beryllium, Total	<0.002		<0.002		1	Component of steel
Cadmium, Total	<0.002		<0.002		2	Component of steel
Copper, Total	0.009		0.0085		2	Component of steel
Mercury, Total	<0.0005		<0.0005		1	Component of steel
Nickel, Total	0.011		0.006		2	Component of steel
Lead, Total	0.013		0.013		1	Component of steel
Antimony, Total	<0.020		<0.020		1	Component of steel
Selenium, Total	<0.02		<0.02		1	Component of steel
Thallium, Total	<0.02		<0.02		1	Component of steel
Zinc, Total	0.014		0.007		2	Component of steel

Part C - List each pollutant shown in Tables F-2, F-3, and F-4 that you know or have reason to believe is present. See the instructions for additional details and requirements. Complete one table for each outfall.

Pollutant and CAS Number (if available)	Maximum Values (include units)		Average Values (include units)		Number of Storm Events Sampled	Sources of Pollutants
	Grab Sample Taken During 1st 20 Minutes	Flow-weighted Composite	Grab Sample Taken During 1st 20 Minutes	Flow-weighted Composite		
Iron, Total	1.43 mg/l		1.43 mg/l		1	component of steel
Molybdenum,	0.231 mg/l		0.231 mg/l		1	component of steel
Manganese, Total	0.215 mg/l		0.215 mg/l		1	component of steel
Chromium, Total	0.016 mg/l		0.016 mg/l		1	component of steel
Nickel, Total	0.011 mg/l		0.006 mg/l		2	component of steel
Zinc, Total	0.014 mg/l		0.007 mg/l		2	component of steel

Part D - Provide data for the storm event(s) which resulted in the maximum values for the flow-weighted composite sample.

1. Date of Storm Event	2. Duration of Storm Event (in minutes)	3. Total rainfall during storm event (in inches)	4. Number of hours between beginning of storm measured and end of previous measurable rain event	5. Maximum flow rate during rain event (gal/min or specify units)	6. Total flow from rain event (gallons or specify units)
NA No flow weighted samples where collected.					

7. Provide a description of the method of flow measurement or estimate.

NA

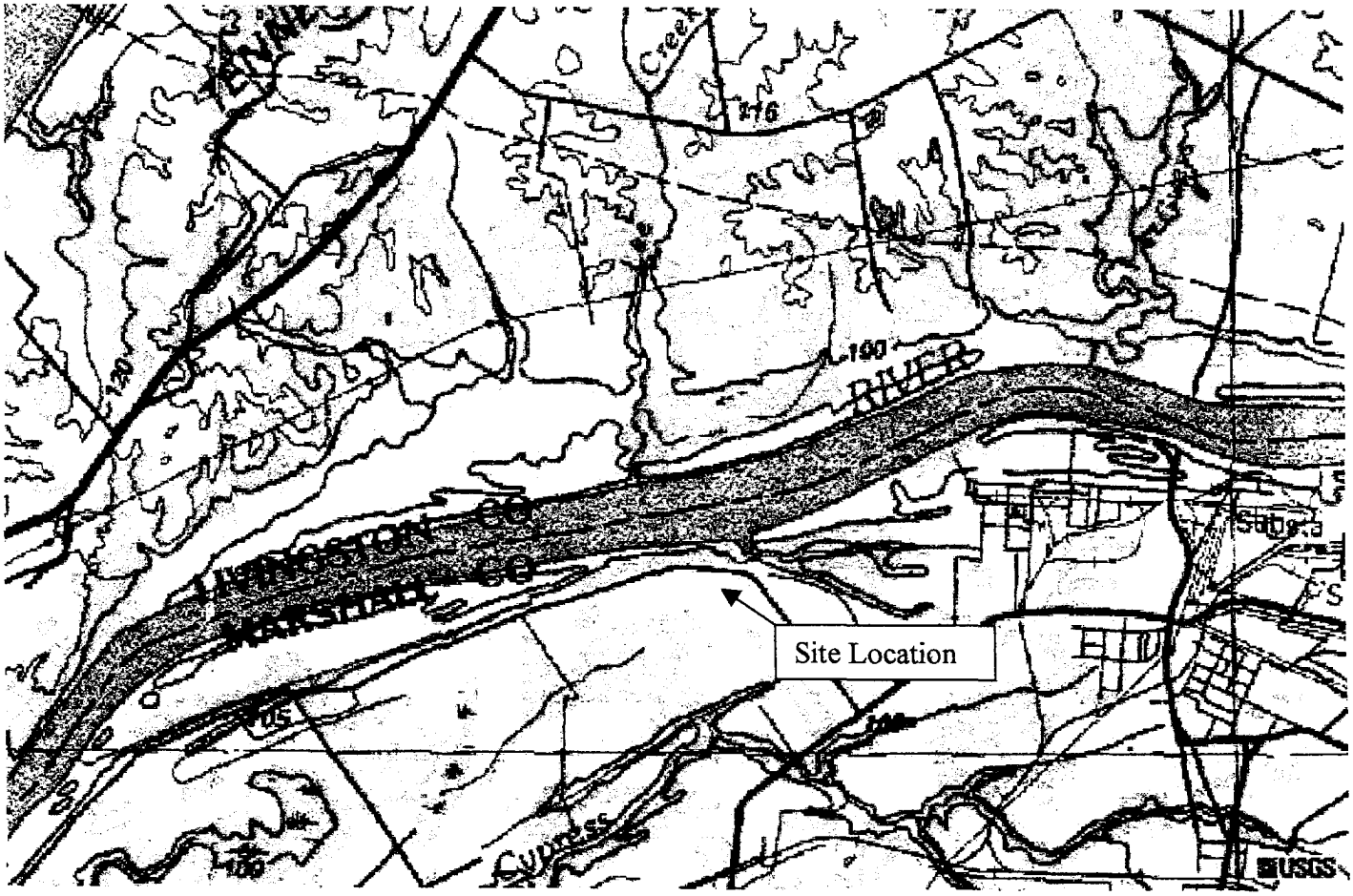

USGS Quadrangle:
Little Cypress, KY

SCALE: 1:24,000

SITE LOCUS

North Star Steel

Calvert City, Kentucky

August 2003 Job No. 05000-051

Figure 1

ENSR INTERNATIONAL

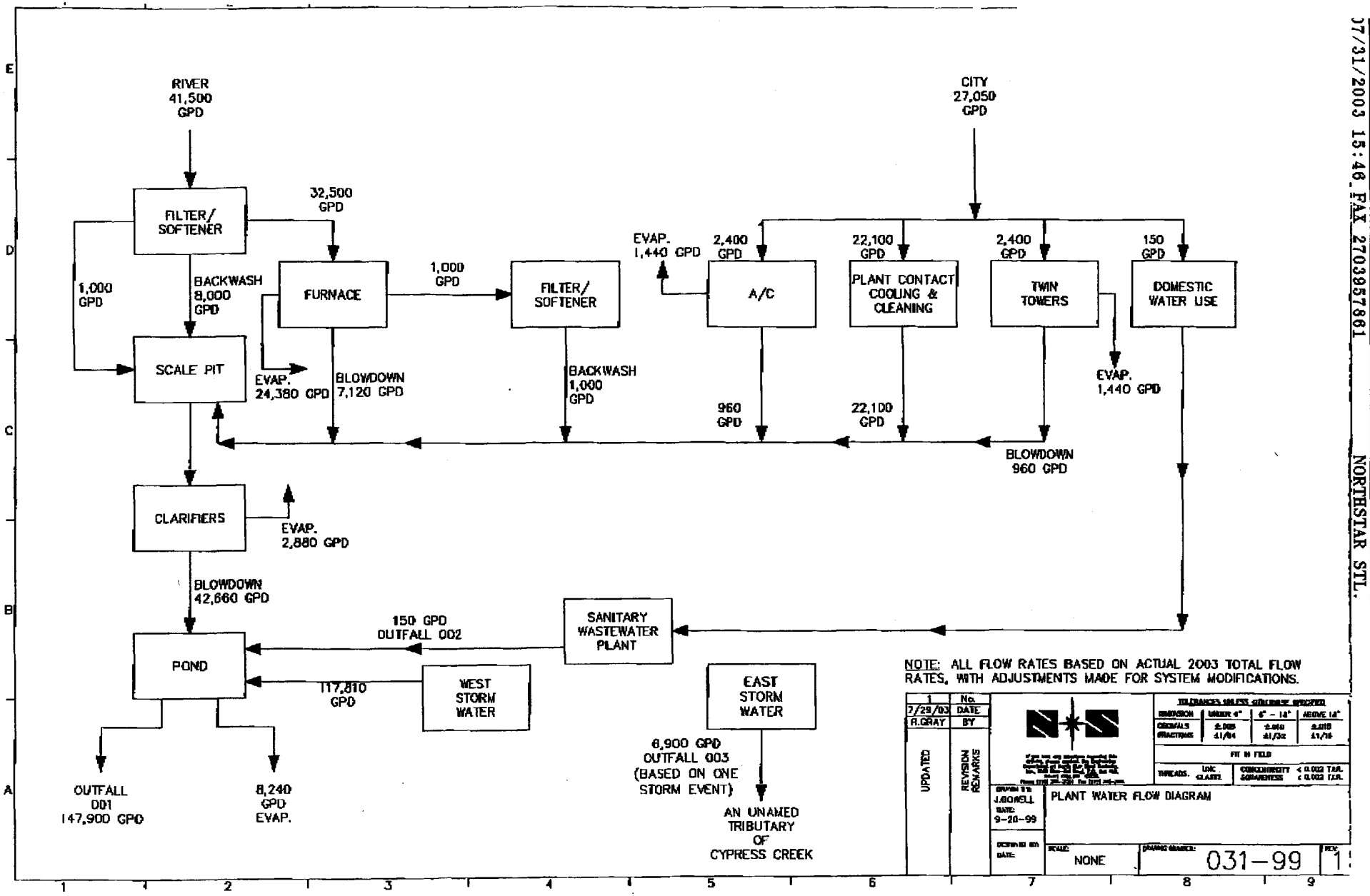
RIVER
41,500
GPD
FILTER/
SOFTENER
32,500
GPD
1,000
GPD
BACKWASH
8,000
GPD
FURNACE
1,000
GPD
FILTER/
SOFTENER
SCALE PIT
EVAP.
24,380 GPD
BLOWDOWN
7,120 GPD
BACKWASH
1,000
GPD
CLARIFIERS
EVAP.
2,880 GPD
BLOWDOWN
42,660 GPD
POND
OUTFALL
001
147,900 GPD
8,240
GPD
EVAP.
150 GPD
OUTFALL 002
SANITARY
WASTEWATER
PLANT
117,810
GPD
WEST
STORM
WATER
EAST
STORM
WATER
6,900 GPD
OUTFALL 003
(BASED ON ONE
STORM EVENT)
AN UNAMED
TRIBUTARY
OF
CYPRESS CREEK
CITY
27,050
GPD
EVAP.
1,440 GPD
2,400
GPD
A/C
960
GPD
22,100
GPD
PLANT CONTACT
COOLING &
CLEANING
22,100
GPD
2,400
GPD
TWIN
TOWERS
BLOWDOWN
960 GPD
EVAP.
1,440 GPD
150
GPD
DOMESTIC
WATER USE
NOTE: ALL FLOW RATES BASED ON ACTUAL 2003 TOTAL FLOW
RATES, WITH ADJUSTMENTS MADE FOR SYSTEM MODIFICATIONS.
No.
DATE
BY
7/29/03
R.GRAY
UPDATED
REVISION
REMARKS
J.BOWELL
9-20-99
PLANT WATER FLOW DIAGRAM
NONE
031-99

APPENDIX B

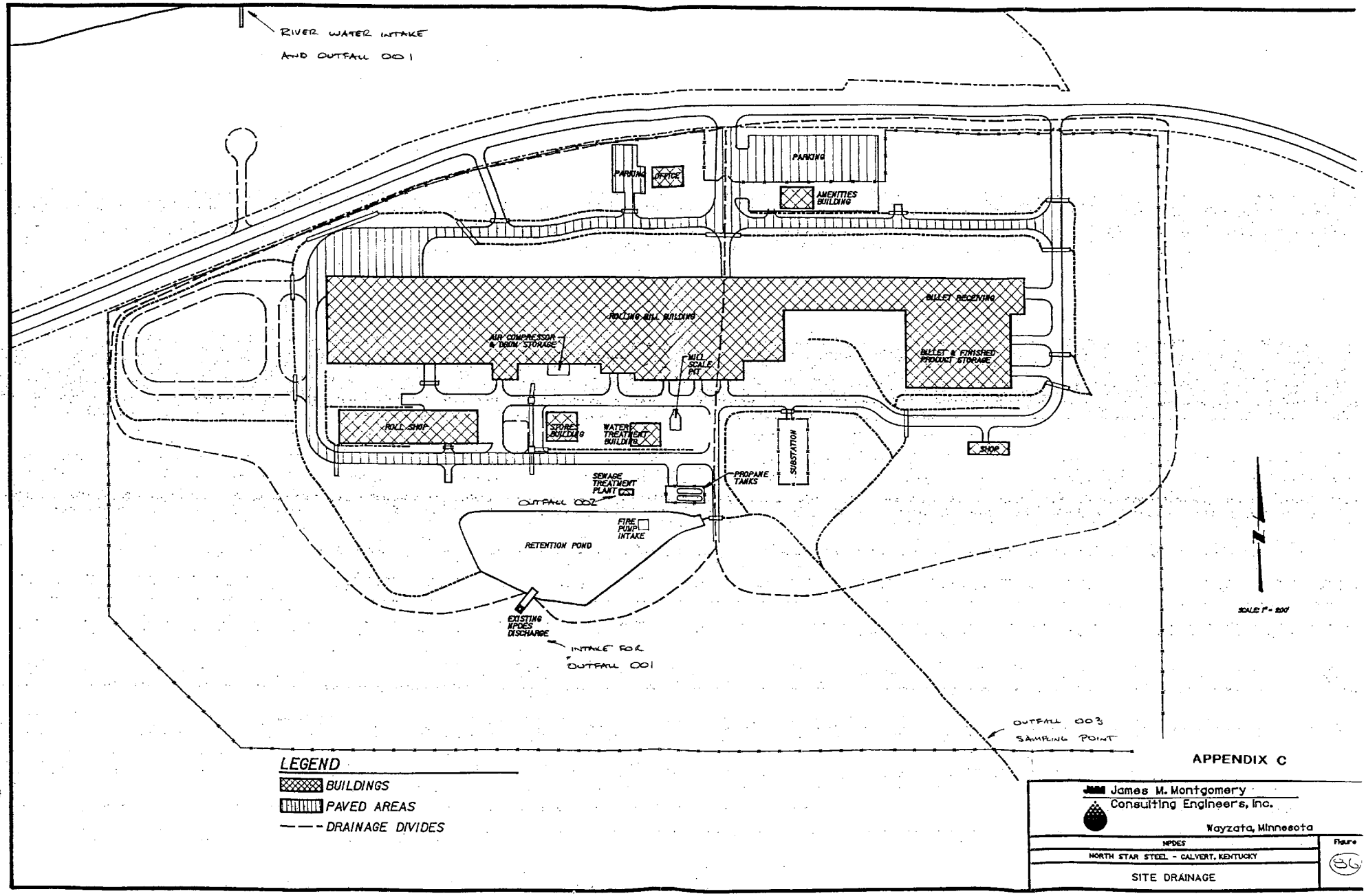

APPENDIX C

James M. Montgomery
Consulting Engineers, Inc.
Wayzata, Minnesota

NPDES

NORTH STAR STEEL - CALVERT, KENTUCKY

SITE DRAINAGE

Figure 8C

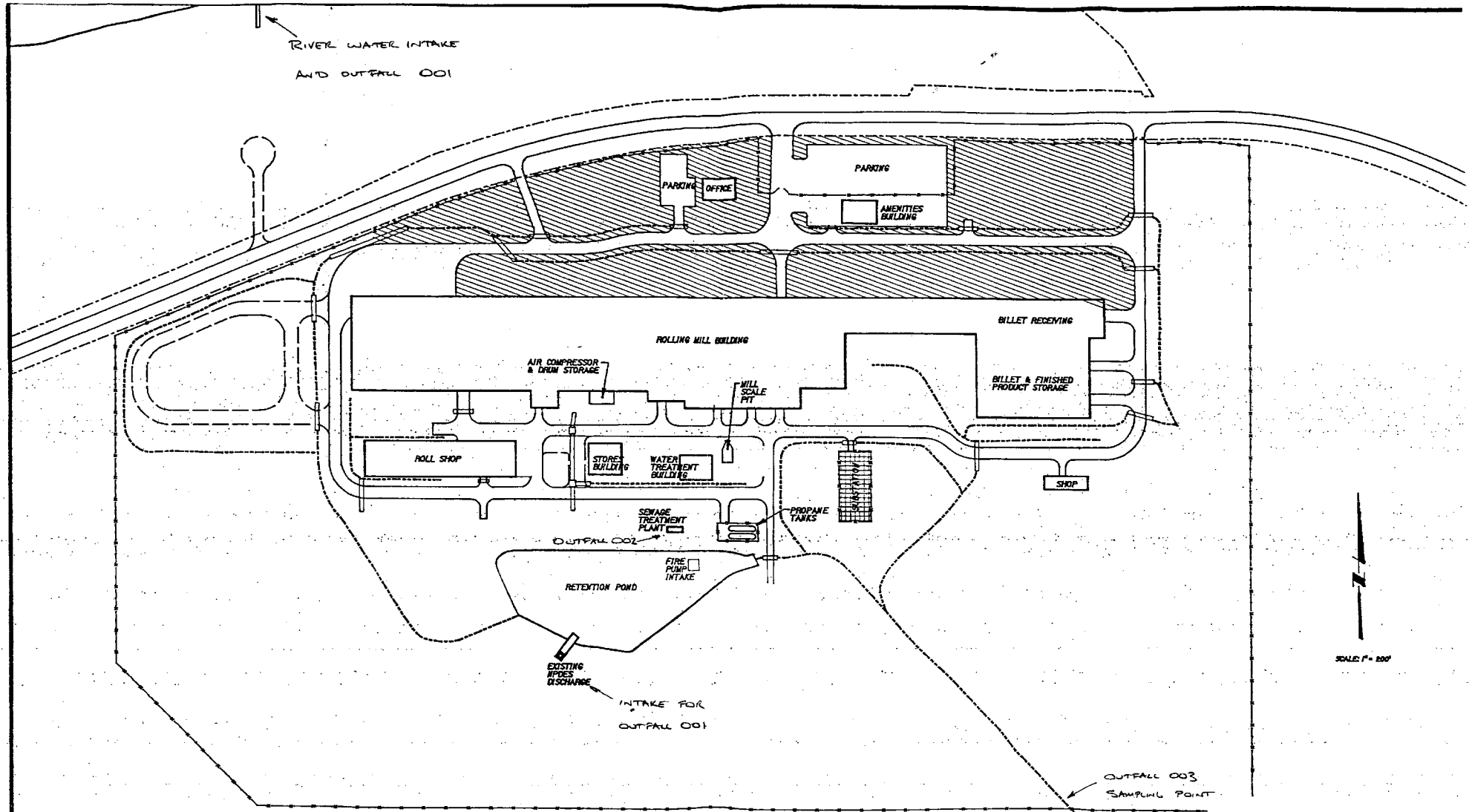

LEGEND

HERBICIDE USE AREA

HERBICIDE AND FERTILIZER USE AREA

APPENDIX D

James M. Montgomery Consulting Engineers, Inc.
Wayzata, Minnesota

NPDES

NORTH STAR STEEL - CALVERT, KENTUCKY

CHEMICAL TREATMENT AREAS

Figure 87

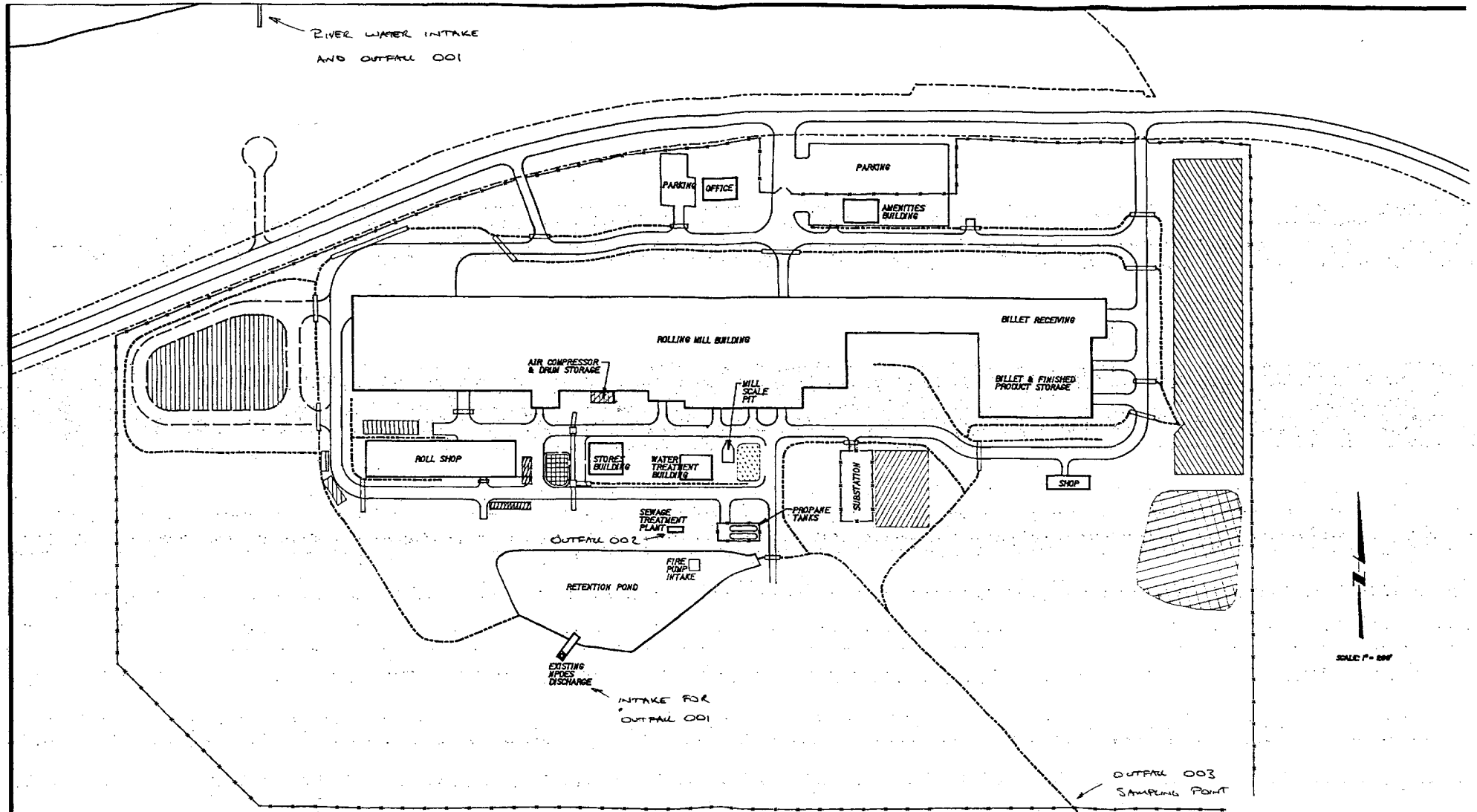

LEGEND

- BILLET STORAGE
- FINISHED PRODUCT STORAGE
- OLD EQUIPMENT STORAGE
- STEEL GUIDES
- DRUM STORAGE
- MILL SCALE SLUDGE STORAGE
- DUMPSTERS
- MISC. SCRAP STORAGE
- FUEL OIL STORAGE

APPENDIX E

James M. Montgomery
Consulting Engineers, Inc.
Wayzata, Minnesota

NPDES
NORTH STAR STEEL - CALVERT, KENTUCKY
STORAGE & DISPOSAL AREAS

Figure 88

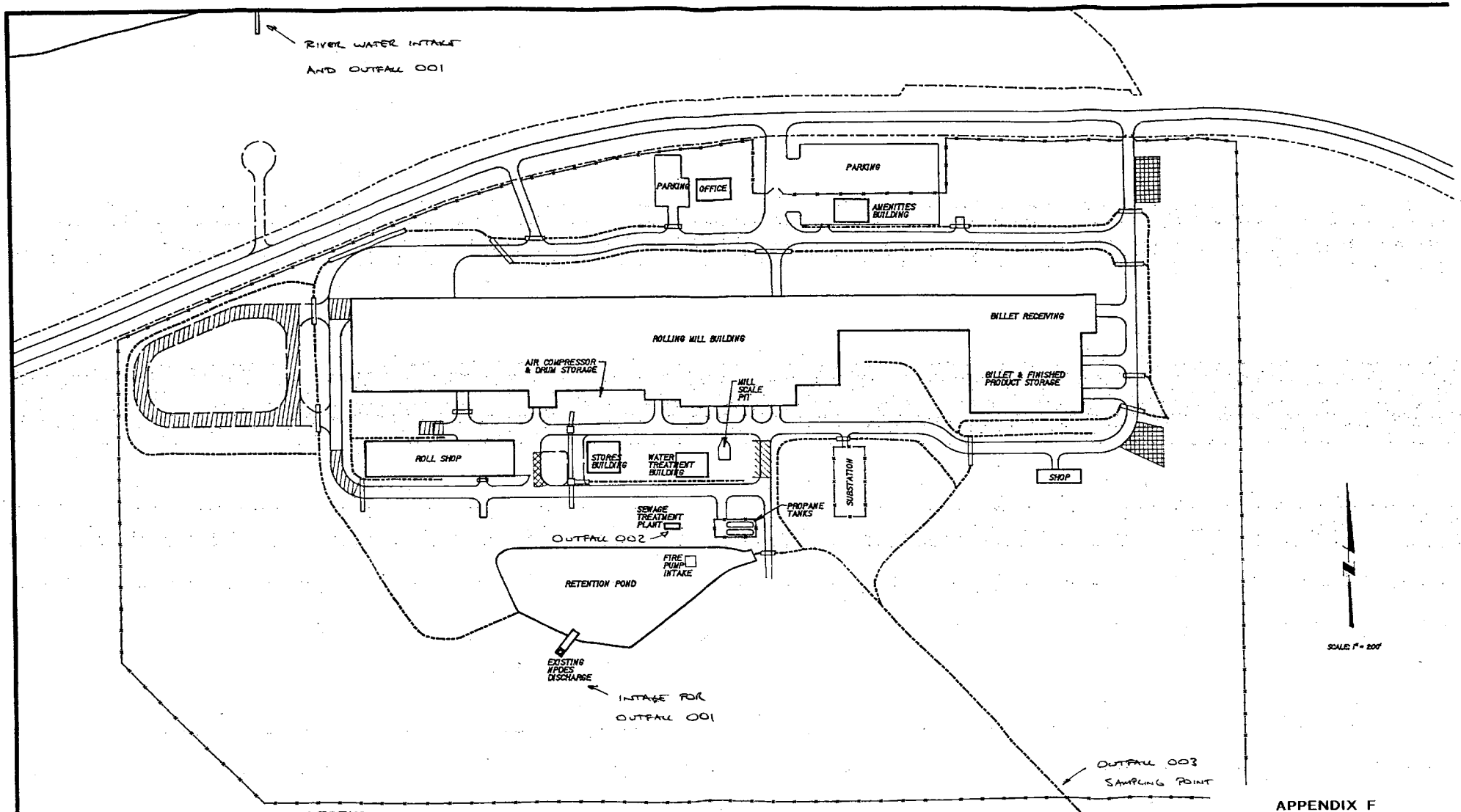

APPENDIX F

James M. Montgomery
Consulting Engineers, Inc.
Wayzata, Minnesota

NPDES

NORTH STAR STEEL - CALVERT, KENTUCKY

LOADING/ACCESS AREAS

Figure 39

DSN OUTFALL 001
HISTORICAL ANALYTICAL RESULTS

		DATE																	
PARAMETER	**UNITS**	**8/6/03**	**7/16/03**	**7/9/03**	**7/2/03**	**6/18/03**	**6/4/03**	**5/21/03**	**5/7/03**	**4/16/03**	**4/2/03**	**3/19/03**	**3/5/03**	**2/19/03**	**2/5/03**	**1/22/03**	**1/15/03**	**1/8/03**	**AVG**
Hardness	mg/L	90	86		104	94	122	173	105	91	90	134	125	98.0	102	99		96	107.3
TSS	mg/L	34	10		11	8	0.8	20	23	0.334	9	9	1.5	31.0	1.4	0.801		2.936	10.9
O&G	mg/L	<5.0	<3.0		<8.0	<3.3	<0.33	<9.8	<10.0	<0.169	<1.3	<3.5	<1.0	<8.0	<2.0	<1.00		<1.835	ND
pH		5.9	7.1		6.9	7.3	6.9	7.1	7.5	7.1	7.2	7.0	7.0	7.1	7.2	6.9		7.2	7.0
Temp	F	82	84		81	83	71	70	75	68	61	63	51	43	46	39		46	64
DO	mg/L	5.75	4.3		3.9	6.0	5.3	5.7	6.7	5.9	7.3	9.7	10.5	12.9	12.8	11.5		10.5	7.9
Flow	MGD	0.271	0.073		0.185	0.078	0.008	0.235	0.228	0.004	0.03	0.083	0.025	0.1850	0.048	0.024		0.044	0.101
Silver	mg/L	<0.020		<0.020							<0.020						<0.020		<0.020
Arsenic	mg/L	0.007		0.007							0.01						<0.005		0.006
Beryllium	mg/L	<0.002		<0.002							<0.002						<0.002		<0.002
Cadmium	mg/L	<0.002		<0.002							<0.002						<0.002		<0.002
Chromium	mg/L	<0.010		0.014							0.024						<0.010		0.010
Copper	mg/L	0.006		<0.005							<0.005						0.008		0.004
Mercury	mg/L	<0.0005		<0.0005							0.002						<0.0005		0.001
Nickel	mg/L	0.011		<0.010							0.031						0.025		0.017
Lead	mg/L	0.009		<0.005							0.006						<0.005		0.004
Antimony	mg/L	<0.020		<0.020							<0.020						<0.020		<0.020
Selenium	mg/L	<0.020		<0.020							<0.020						<0.020		<0.020
Thallium	mg/L	<0.020		<0.020							<0.020						<0.020		<0.020
Zinc	mg/L	0.01		<0.010							<0.010						<0.010		0.003
BOD	mg/L	8.0																	8.0
Chloride	mg/L	72.0																	72
Ammonia	mg/L	<0.10																	<0.10
TOC	mg/L	39.0																	39.0
COD	mg/L	69.0																	69.0
Iron	mg/L	1.53																	1.530
Manganese	mg/L	0.216																	0.216
Molybdenum	mg/L	0.228																	0.228
Chlorine, Res	mg/L	0.23																	0.230
Cyanide, Total	mg/L	<0.01																	<0.01
Phenols, Total	mg/L	<0.05																	<0.05
Bromide	mg/L	<10.0																	<10.0

NA - Not Applicable
< #'s - Treated as ND in calculations

DSN OUTFALL 002
HISTORICAL ANALYTICAL RESULTS

		DATE												
PARAMETER	**UNITS**	**8/6/03**	**7/9/03**	**6/11/03**	**5/14/03**	**4/9/03**	**3/12/03**	**2/12/03**	**1/15/03**	**12/11/02**	**11/6/02**	**10/9/02**	**9/11/02**	**AVG**
Hardness	mg/L	170.0												170.0
TSS	mg/L	<2.0	<2.0	3.0	4.0	<2.0	<2.0	<2.0	2.0	<2.0	<2.0	2.0	63	6.2
O&G	mg/L	NA												NA
pH		6.0	7.1	6.9	7.1	7.1	6.9	7.1	7.1	7.1	7.2	7.2	7.1	7.0
Temp	F	88	85	71	65	52	49	42	44	48	50	72	82	62.3
DO	mg/L	5.2	6.1	6.5	7.0	12.3	11.3	10.5	14.2	9.5	6.5	5.8	5.3	8.4
Flow	MGD	0.00024	0.00018	0.00024	0.00018	0.00018	0.00018	0.00018	0.00018	0.00018	0.00012	0.00012	0.00018	0.00018
Silver	mg/L	NA												NA
Arsenic	mg/L	NA												NA
Beryllium	mg/L	NA												NA
Cadmium	mg/L	<0.002												<0.002
Chromium	mg/L	0.022												0.022
Copper	mg/L	0.015												0.015
Mercury	mg/L	NA												NA
Nickel	mg/L	<0.010												<0.010
Lead	mg/L	NA												NA
Antimony	mg/L	NA												NA
Selenium	mg/L	NA												NA
Thallium	mg/L	NA												NA
Zinc	mg/L	0.025												0.025
BOD	mg/L	<3.0	<3.0	<3.0	<3.0	<3.0	5.0	6.0	<3.0	<3.0	<3.0	4.0	<3.0	1.3
Chloride	mg/L	91.0												91.0
Ammonia	mg/L	<0.10	0.13	0.33	0.20	<0.10	<0.10	<0.10	<0.10	<0.10	<0.10	<0.10	<0.10	0.06
TOC	mg/L	24.0												24.0
COD	mg/L	12.0												12.0
Iron	mg/L	0.054												0.054
Manganese	mg/L	0.013												0.013
Molybdenum	mg/L	NA												NA
Fecal Coliform	CFU/100m	<10.0	<10.0	<10.0	<10.0	<10.0	<10.0	<10.0	<10.0	<10.0	<10.0	<10.0	<10.0	<10.0

NA - Not Applicable
< #'s - Treated as ND in calculations

DSN OUTFALL 003
HISTORICAL ANALYTICAL RESULTS

		DATE												
PARAMETER	**UNITS**	**8/6/03**	**7/2/03**	**6/4/03**	**5/7/03**	**4/1-2/200**	**3/5/03**	**2/5/03**	**1/8/03**	**12/11/02**	**11/6/02**	**10/6/02**	**9/27/02**	**AVG**
Hardness	mg/L	87	107	146	76	49	124	101	96	103	98	92	77	96.3
TSS	mg/L	28	7	11	23	20	8	3.3	0.4087	10	13	22	9	12.9
O&G	mg/L	<5	<5	<5	<5	29	<5	<5	<0.2919	<5	<5	<5	<5	2.4
pH		6.0	7.0	7.1	6.8	6.9	6.9	7.0	7.1	6.9	6.9	7.0	7.1	6.9
Temp	F	84	82	69	68	65	50	42	45	43	59	72	67	62.2
DO	mg/L	5.6	4.3	6.5	5.9	6.7	10.8	11.9	9.8	10.3	7.3	5.7	7.2	7.7
Flow	MGD	0.007	0.007	0.019	0.807	0.007	0.055	0.036	0.007	0.155	0.019	0.004	0.439	0.130
Silver	mg/L					<0.020								<0.020
Arsenic	mg/L					0.01								0.01
Beryllium	mg/L					<0.002								<0.002
Cadmium	mg/L	<0.002				<0.002								<0.002
Chromium	mg/L					0.016								0.016
Copper	mg/L	0.008				0.009								0.009
Mercury	mg/L					<0.0005								<0.0005
Nickel	mg/L	0.011				<0.010								0.006
Lead	mg/L					0.013								0.013
Antimony	mg/L					<0.020								<0.020
Selenium	mg/L					<0.020								<0.020
Thallium	mg/L					<0.020								<0.020
Zinc	mg/L	<0.01				0.014								0.007
BOD	mg/L	9.0												9.0
Chloride	mg/L	87												87.0
Ammonia	mg/L	<01.0												<01.0
TOC	mg/L	40.0												40.0
COD	mg/L	82.0												82.0
Iron	mg/L	1.43												1.430
Manganese	mg/L	0.215												0.215
Molybdenum	mg/L	0.231												0.231

NA - Not Applicable
< #'s - Treated as ND in calculations

ANALYTICAL INDUSTRIES, INC.

ENVIRONMENTAL CONSULTANTS & CHEMICAL ANALYSTS

CLIENT: NORTH STAR STEEL KENTUCKY
P.O. BOX 468
CALVERT CITY, KY 42029

PAGE 1 OF 6

RELEASE NUMBER: 211439

PROJECT I.D.: PERMIT RENEWAL

DATE COLLECTED: 08-06-03

SAMPLE I.D.: OUTFALL 001

DATE RECEIVED: 08-06-03

LABORATORY I.D.: 211439-01

DATE COMPLETED: 08-20-03

ANALYTE	*RESULT*	*UNITS*	*METHOD*	*DATE ANALYZED*	*ANALYST*
Biological Oxygen Demand	8.	mg/L	STD. MTDS. 5210B	8/12/03	JW
Total Suspended Solids	34.	mg/L	EPA 160.2	8/7/03	JW
pH	5.90	Std. Units	EPA 150.1	8/6/03	JK
Chloride	72.	mg/L	EPA 325.2	8/7/03	JW
Chemical Oxygen Demand	69.	mg/L	EPA 410.4	8/7/03	JW
Ammonia	<0.10	mg/L	EPA 350.3	8/8/03	JW
Total Organic Carbon	39.0	mg/L	EPA 415.1	8/12/03	SE
Chlorine, Residual	0.23	mg/L	EPA 330.5	8/6/03	JK
Oil & Grease	<5.	mg/L	EPA 1664	8/9/03	JW
Total Cyanide	<0.01	mg/L	EPA 335.2	8/12/03	SE
Total Phenols	<0.05	mg/L	EPA 420.1	8/14/03	SE
Bromide	<10.0	mg/L	EPA 320.1	8/8/03	SE
Temperature	82.	°F	-----	*CLIENT SUPPLIED	
Dissolved Oxygen	5.75	mg/L	-----	*CLIENT SUPPLIED	
Flow	0.271	MGD	-----	*CLIENT SUPPLIED	

Approved Signatory: Joy E. Knight
Joy E. Knight
Environmental Laboratory Manager

P.O. Box 3327 • Paducah, KY 42002-3327 • email: aillabs@bellsouth.net • www.aillabs.com
(270) 898-8683 (270) 898-3531 Fax
A KENTUCKY CORPORATION

ANALYTICAL INDUSTRIES, INC.

ENVIRONMENTAL CONSULTANTS & CHEMICAL ANALYSTS

CLIENT:	NORTH STAR STEEL KENTUCKY P.O. BOX 468 CALVERT CITY, KY 42029	RELEASE NUMBER:	211439
PROJECT I.D.:	PERMIT RENEWAL	DATE COLLECTED:	08-06-03
SAMPLE I.D.:	OUTFALL 001	DATE RECEIVED:	08-06-03
LABORATORY I.D.:	211439-01	DATE COMPLETED:	08-20-03

ANALYTE	*RESULT*	*UNITS*	*METHOD*	*DATE ANALYZED*	*ANALYST*
Hardness	90.	mg/L as $CaCO_3$	STD. MTDS. 2340B	8/13/03	JK
Arsenic	0.007	mg/L	EPA 200.7	8/13/03	JK
Antimony	<0.020	mg/L	EPA 200.7	8/13/03	JK
Beryllium	<0.002	mg/L	EPA 200.7	8/13/03	JK
Cadmium	<0.002	mg/L	EPA 200.7	8/13/03	JK
Chromium	<0.010	mg/L	EPA 200.7	8/13/03	JK
Copper	0.006	mg/L	EPA 200.7	8/13/03	JK
Iron	1.53	mg/L	EPA 200.7	8/13/03	JK
Lead	0.009	mg/L	EPA 200.7	8/13/03	JK
Manganese	0.216	mg/L	EPA 200.7	8/13/03	JK
Molybdenum	0.228	mg/L	EPA 200.7	8/13/03	JK
Nickel	0.011	mg/L	EPA 200.7	8/13/03	JK
Selenium	<0.020	mg/L	EPA 200.7	8/13/03	JK
Silver	<0.020	mg/L	EPA 200.7	8/13/03	JK
Thallium	<0.020	mg/L	EPA 200.7	8/13/03	JK
Zinc	0.010	mg/L	EPA 200.7	8/13/03	JK
Mercury	<0.0005	mg/L	EPA 245.1	8/8/03	JW

Approved Signatory: Joy E Knight
Joy E. Knight
Environmental Laboratory Manager

P.O. Box 3327 • Paducah, KY 42002-3327 • email: ailabs@bellsouth.net • www.ailabs.com
(270) 898-8683 (270) 898-3531 Fax
A KENTUCKY CORPORATION

ANALYTICAL INDUSTRIES, INC.

ENVIRONMENTAL CONSULTANTS & CHEMICAL ANALYSTS

CLIENT: NORTH STAR STEEL KENTUCKY
P.O. BOX 468
CALVERT CITY, KY 42029

PAGE 3 OF 6

RELEASE NUMBER: 211439

PROJECT I.D.: PERMIT RENEWAL

DATE COLLECTED: 08-06-03

SAMPLE I.D.: OUTFALL 001

DATE RECEIVED: 08-06-03

LABORATORY I.D.: 211439-01

DATE COMPLETED: 08-20-03

ANALYTE	*RESULT*	*UNITS*	*METHOD*	*DATE ANALYZED*	*ANALYST*
VOLATILES					
Acrolein	BDL	ug/L	EPA 624	08/09/03	MS/SE
Acrylonitrile	BDL	ug/L	EPA 624	08/09/03	MS/SE
Benzene	<5.0	ug/L	EPA 624	08/09/03	MS/SE
Bromoform	<5.0	ug/L	EPA 624	08/09/03	MS/SE
Carbon Tetrachloride	<5.0	ug/L	EPA 624	08/09/03	MS/SE
Chlorobenzene	<5.0	ug/L	EPA 624	08/09/03	MS/SE
Chlorodibromomethane	<5.0	ug/L	EPA 624	08/09/03	MS/SE
Chloroethane	<10.0	ug/L	EPA 624	08/09/03	MS/SE
2-Chloroethyl vinyl Ether	<5.0	ug/L	EPA 624	08/09/03	MS/SE
Chloroform	<5.0	ug/L	EPA 624	08/09/03	MS/SE
Dichlorobromomethane	<5.0	ug/L	EPA 624	08/09/03	MS/SE
1,1-Dichloroethane	<5.0	ug/L	EPA 624	08/09/03	MS/SE
1,2-Dichloroethane	<5.0	ug/L	EPA 624	08/09/03	MS/SE
1,1-Dichlorethylene	<5.0	ug/L	EPA 624	08/09/03	MS/SE
1,2-Dichloropropane	<5.0	ug/L	EPA 624	08/09/03	MS/SE
1,3-Dichloropropylene	<5.0	ug/L	EPA 624	08/09/03	MS/SE
Ethylbenzene	<5.0	ug/L	EPA 624	08/09/03	MS/SE
Methyl Bromide	<10.0	ug/L	EPA 624	08/09/03	MS/SE
Methyl Chloride	<10.0	ug/L	EPA 624	08/09/03	MS/SE
Methylene Chloride	<5.0	ug/L	EPA 624	08/09/03	MS/SE
1,1,2,2-Tetrachloroethane	<5.0	ug/L	EPA 624	08/09/03	MS/SE

* BDL = Below Detection Limit

Approved Signatory: Joy E. Knight
Joy E. Knight
Environmental Laboratory Manager

ANALYTICAL INDUSTRIES, INC.

ENVIRONMENTAL CONSULTANTS & CHEMICAL ANALYSTS

CLIENT:	NORTH STAR STEEL KENTUCKY P.O. BOX 468 CALVERT CITY, KY 42029	RELEASE NUMBER:	211439
PROJECT I.D.:	PERMIT RENEWAL	DATE COLLECTED:	08-06-03
SAMPLE I.D.:	OUTFALL 001	DATE RECEIVED:	08-06-03
LABORATORY I.D.:	211439-01	DATE COMPLETED:	08-20-03

ANALYTE	*RESULT*	*UNITS*	*METHOD*	*DATE ANALYZED*	*ANALYST*
VOLATILES (CONT.)					
Tetrachloroethylene	<5.0	ug/L	EPA 624	08/09/03	MS/SE
Toluene	<5.0	ug/L	EPA 624	08/09/03	MS/SE
1,2-Trans-Dichloroethylene	<5.0	ug/L	EPA 624	08/09/03	MS/SE
1,1,1-Trichloroethane	<5.0	ug/L	EPA 624	08/09/03	MS/SE
1,1,2-Trichloroethane	<5.0	ug/L	EPA 624	08/09/03	MS/SE
Trichloroethylene	<5.0	ug/L	EPA 624	08/09/03	MS/SE
Vinyl Chloride	<10.0	ug/L	EPA 624	08/09/03	MS/SE
SEMI-VOLATILES ACID					
2-Chlorophenol	<50.0	ug/L	EPA 625	8/8/03	AE/SE
2,4-Dichlorophenol	<50.0	ug/L	EPA 625	8/8/03	AE/SE
2,4-Dimethylphenol	<50.0	ug/L	EPA 625	8/8/03	AE/SE
4,6-Dinitro-o-cresol	<50.0	ug/L	EPA 625	8/8/03	AE/SE
2,4-Dinitrophenol	<50.0	ug/L	EPA 625	8/8/03	AE/SE
2-Nitrophenol	<50.0	ug/L	EPA 625	8/8/03	AE/SE
4-Nitrophenol	<50.0	ug/L	EPA 625	8/8/03	AE/SE
P-chloro-m-cresol	<50.0	ug/L	EPA 625	8/8/03	AE/SE
Pentachlorophenol	<50.0	ug/L	EPA 625	8/8/03	AE/SE
Phenol	<50.0	ug/L	EPA 625	8/8/03	AE/SE
2,4,6-Trichlorophenol	<50.0	ug/L	EPA 625	8/8/03	AE/SE

Approved Signatory: Joy E. Knight
Joy E. Knight
Environmental Laboratory Manager

P.O. Box 3327 • Paducah, KY 42002-3327 • email: ailabs@bellsouth.net • www.ailabs.com
(270) 898-8683 (270) 898-3531 Fax
A KENTUCKY CORPORATION

ANALYTICAL INDUSTRIES, INC.

ENVIRONMENTAL CONSULTANTS & CHEMICAL ANALYSTS

CLIENT: NORTH STAR STEEL KENTUCKY
P.O. BOX 468
CALVERT CITY, KY 42029

PAGE 5 OF 6

RELEASE NUMBER: 211439

PROJECT I.D.: PERMIT RENEWAL

DATE COLLECTED: 08-06-03

SAMPLE I.D.: OUTFALL 001

DATE RECEIVED: 08-06-03

LABORATORY I.D.: 211439-01

DATE COMPLETED: 08-20-03

ANALYTE	*RESULT*	*UNITS*	*METHOD*	*DATE ANALYZED*	*ANALYST*
SEMI-VOLATILES BASE/NEUTRAL					
Acenaphthene	<10.0	ug/L	EPA 625	8/8/03	AE/SE
Acenaphtylene	<10.0	ug/L	EPA 625	8/8/03	AE/SE
Anthracene	<10.0	ug/L	EPA 625	8/8/03	AE/SE
Benzidine	<50.0	ug/L	EPA 625	8/8/03	AE/SE
Benzo(a)anthracene	<10.0	ug/L	EPA 625	8/8/03	AE/SE
Benzo(a)pyrene	<10.0	ug/L	EPA 625	8/8/03	AE/SE
3,4-Benzofluoranthene	<10.0	ug/L	EPA 625	8/8/03	AE/SE
Benzo(g,h,i)perylene	<10.0	ug/L	EPA 625	8/8/03	AE/SE
Benzo(k)fluoranthene	<10.0	ug/L	EPA 625	8/8/03	AE/SE
Bis(2-chloroethoxy)-methane	<10.0	ug/L	EPA 625	8/8/03	AE/SE
Bis(2-chloroisopropyl)-Ether	<10.0	ug/L	EPA 625	8/8/03	AE/SE
Bis(2-ethlyhexyl)-phthalate	<10.0	ug/L	EPA 625	8/8/03	AE/SE
4-Bromophenyl Phenyl ether	<10.0	ug/L	EPA 625	8/8/03	AE/SE
Butylbenzyl phthalate	<10.0	ug/L	EPA 625	8/8/03	AE/SE
2-Chloronaphthalene	<10.0	ug/L	EPA 625	8/8/03	AE/SE
4-Chlorophenyl phenyl ether	<10.0	ug/L	EPA 625	8/8/03	AE/SE
Chrysene	<10.0	ug/L	EPA 625	8/8/03	AE/SE
Dibenzo(a,h)anthracene	<10.0	ug/L	EPA 625	8/8/03	AE/SE
1,2-Dichlorobenzene	<10.0	ug/L	EPA 625	8/8/03	AE/SE
1,3-Dichlorobenzene	<10.0	ug/L	EPA 625	8/8/03	AE/SE
1,4-Dichlorobenzene	<10.0	ug/L	EPA 625	8/8/03	AE/SE
3,3'-Dichlorobenzidene	<50.0	ug/L	EPA 625	8/8/03	AE/SE

Approved Signatory: Joy E. Knight
Joy E. Knight
Environmental Laboratory Manager

P.O. Box 3327 • Paducah, KY 42002-3327 • email: ailabs@bellsouth.net • www.ailabs.com
(270) 898-8683 (270) 898-3531 Fax

ANALYTICAL INDUSTRIES, INC.

ENVIRONMENTAL CONSULTANTS & CHEMICAL ANALYSTS

CLIENT: NORTH STAR STEEL KENTUCKY
P.O. BOX 468
CALVERT CITY, KY 42029

RELEASE NUMBER: 211439

PROJECT I.D.: PERMIT RENEWAL

DATE COLLECTED: 08-06-03

SAMPLE I.D.: OUTFALL 001

DATE RECEIVED: 08-06-03

LABORATORY I.D.: 211439-01

DATE COMPLETED: 08-20-03

ANALYTE	RESULT	UNITS	METHOD	DATE ANALYZED	ANALYST
SEMI-VOLATILES BASE/NEUTRAL (CONT.)					
Diethyl Phthalate	<10.0	ug/L	EPA 625	8/8/03	AE/SE
Dimethyl Phthalate	<10.0	ug/L	EPA 625	8/8/03	AE/SE
Di-n-butyl Phthalate	<10.0	ug/L	EPA 625	8/8/03	AE/SE
2,4-Dinitrotoluene	<10.0	ug/L	EPA 625	8/8/03	AE/SE
2,6-Dinitrotoluene	<10.0	ug/L	EPA 625	8/8/03	AE/SE
Di-n-octyl Phthalate	<10.0	ug/L	EPA 625	8/8/03	AE/SE
1,2-Diphenylhydrazine as azonbenzene	<10.0	ug/L	EPA 625	8/8/03	AE/SE
Fluoranthene	<10.0	ug/L	EPA 625	8/8/03	AE/SE
Fluorene	<10.0	ug/L	EPA 625	8/8/03	AE/SE
Hexachlorobenzene	<10.0	ug/L	EPA 625	8/8/03	AE/SE
Hexachlorobutadiene	<10.0	ug/L	EPA 625	8/8/03	AE/SE
Hexachlorocyclopentadiene	<10.0	ug/L	EPA 625	8/8/03	AE/SE
Hexachloroethane	<10.0	ug/L	EPA 625	8/8/03	AE/SE
Indneo-(1,2,3-cd)-Pyrene	<10.0	ug/L	EPA 625	8/8/03	AE/SE
Isophorone	<10.0	ug/L	EPA 625	8/8/03	AE/SE
Naphthalene	<10.0	ug/L	EPA 625	8/8/03	AE/SE
Nitrobenzene	<10.0	ug/L	EPA 625	8/8/03	AE/SE
N-Nitrosodimethlyamine	<10.0	ug/L	EPA 625	8/8/03	AE/SE
N-nitrosodi-n-propylamine	<10.0	ug/L	EPA 625	8/8/03	AE/SE
N-nitrosodiphenylamine	<10.0	ug/L	EPA 625	8/8/03	AE/SE
Phenanthrene	<10.0	ug/L	EPA 625	8/8/03	AE/SE
Pyrene	<10.0	ug/L	EPA 625	8/8/03	AE/SE
1,2,4-Trichlorobenzene	<10.0	ug/L	EPA 625	8/8/03	AE/SE

Approved Signatory: Joy E. Knight
Joy E. Knight
Environmental Laboratory Manager

P.O. Box 3327 • Paducah, KY 42002-3327 • email: ailabs@bellsouth.net • www.ailabs.com
(270) 898-8683 (270) 898-3531 Fax
A KENTUCKY CORPORATION

ANALYTICAL INDUSTRIES, INC.

ENVIRONMENTAL CONSULTANTS & CHEMICAL ANALYSTS

CLIENT: NORTH STAR STEEL KENTUCKY
P.O. BOX 468
CALVERT CITY, KY 42029

RELEASE NUMBER: 211357

PROJECT I.D.: BI-MONTHLY

DATE COLLECTED: 07-16-03

SAMPLE I.D.: OUTFALL 001

DATE RECEIVED: 07-16-03

LABORATORY I.D.: 211357-01

DATE COMPLETED: 08-04-03

ANALYTE	*RESULT*	*UNITS*	*METHOD*	*DATE ANALYZED*	*ANALYST*
Hardness	86.	mg/L as $CaCO_3$	STD. MTDS. 2340B	07/25/03	CM
Total Suspended Solids	10.	lbs/Day	EPA 160.2	07/16/03	JW
Oil and Grease	<3.	lbs/Day	EPA 1664	08/04/03	JW
pH	7.1	-----	*Client Supplied		
Temperature	84.	°F	*Client Supplied		
Dissolved Oxygen	4.3	mg/L	*Client Supplied		
Flow	0.0730	MGD	*Client Supplied		

Approved Signatory: Joy E. Knight
Joy E. Knight
Environmental Laboratory Manager

P.O. Box 3327 • Paducah, KY 42002-3327 • email: aiilabs@bellsouth.net • www.aiilabs.com
(270) 898-8683 (270) 898-3531 Fax
A KENTUCKY CORPORATION

ANALYTICAL INDUSTRIES, INC

ENVIRONMENTAL CONSULTANTS & CHEMICAL ANALYSTS

CLIENT:	NORTH STAR STEEL KENTUCKY P.O. BOX 468 CALVERT CITY, KY 42029	RELEASE NUMBER:	211325
PROJECT I.D.:	3RD QUARTER	DATE COLLECTED:	7/8-7/9
SAMPLE I.D.:	OUTFALL 001	DATE RECEIVED:	07-09-03
LABORATORY I.D.:	211325-01	DATE COMPLETED:	07-30-03

ANALYTE	*RESULT*	*UNIT*	*METHOD*
Silver	<0.020	mg/L	EPA 200.7
Arsenic	0.007	mg/L	EPA 200.7
Beryllium	<0.002	mg/L	EPA 200.7
Cadmium	<0.002	mg/L	EPA 200.7
Chromium	0.014	mg/L	EPA 200.7
Copper	<0.005	mg/L	EPA 200.7
Mercury	<0.0005	mg/L	EPA 245.1
Nickel	<0.010	mg/L	EPA 200.7
Lead	<0.005	mg/L	EPA 200.7
Antimony	<0.020	mg/L	EPA 200.7
Selenium	<0.020	mg/L	EPA 200.7
Thallium	<0.020	mg/L	EPA 200.7
Zinc	<0.010	mg/L	EPA 200.7
ACUTE TOXICITY	<1.3	TUa	EPA Acute/Chronic Manual 2nd Edition March 1989
Ceriodaphnia dubia	<1.3	TUa	*Complete Biological Report will be sent from Fouser Environmental Services.

Approved Signatory: Joy E Knight

Joy E. Knight
Environmental Laboratory Manager

P.O. Box 3327 • Paducah, KY 42002-3327 • email: aiilabs@bellsouth.net • www.aiilabs.com
(270) 898-8683 (270) 898-3531

ANALYTICAL INDUSTRIES, INC.

ENVIRONMENTAL CONSULTANTS & CHEMICAL ANALYSTS

CLIENT:	NORTH STAR STEEL KENTUCKY P.O. BOX 468 CALVERT CITY, KY 42029	RELEASE NUMBER:	211325
PROJECT I.D.:	3RD QUARTER	DATE COLLECTED:	7/8-7/9
SAMPLE I.D.:	OUTFALL 001	DATE RECEIVED:	07-09-03
LABORATORY I.D.:	211325-01	DATE COMPLETED:	07-30-03

ANALYTE	*RESULT*	*UNIT*	*METHOD*
Silver	<0.020	mg/L	EPA 200.7
Arsenic	0.007	mg/L	EPA 200.7
Beryllium	<0.002	mg/L	EPA 200.7
Cadmium	<0.002	mg/L	EPA 200.7
Chromium	0.014	mg/L	EPA 200.7
Copper	<0.005	mg/L	EPA 200.7
Mercury	<0.0005	mg/L	EPA 245.1
Nickel	<0.010	mg/L	EPA 200.7
Lead	<0.005	mg/L	EPA 200.7
Antimony	<0.020	mg/L	EPA 200.7
Selenium	<0.020	mg/L	EPA 200.7
Thallium	<0.020	mg/L	EPA 200.7
Zinc	<0.010	mg/L	EPA 200.7
ACUTE TOXICITY	<1.3	TUa	EPA Acute/Chronic Manual 2nd Edition March 1989
Ceriodaphnia dubia	<1.3	TUa	*Complete Biological Report will be sent from Fouser Environmental Services.

Approved Signatory: Joy E. Knight

Joy E. Knight
Environmental Laboratory Manager

P.O. Box 3327 • Paducah, KY 42002-3327 • email: aillabs@bellsouth.net • www.aillabs.com
(270) 898-8683 (270) 898-3531 Fax

ANALYTICAL INDUSTRIES, INC.

ENVIRONMENTAL CONSULTANTS & CHEMICAL ANALYSTS

CLIENT:	NORTH STAR STEEL KENTUCKY P.O. BOX 468 CALVERT CITY, KY 42029	RELEASE NUMBER:	211325
PROJECT I.D.:	3RD QUARTER	DATE COLLECTED:	7/8-7/9
SAMPLE I.D.:	OUTFALL 001	DATE RECEIVED:	07-09-03
LABORATORY I.D.:	211325-01	DATE COMPLETED:	07-30-03

ANALYTE	*RESULT*	*UNIT*	*METHOD*
Silver	<0.020	mg/L	EPA 200.7
Arsenic	0.007	mg/L	EPA 200.7
Beryllium	<0.002	mg/L	EPA 200.7
Cadmium	<0.002	mg/L	EPA 200.7
Chromium	0.014	mg/L	EPA 200.7
Copper	<0.005	mg/L	EPA 200.7
Mercury	<0.0005	mg/L	EPA 245.1
Nickel	<0.010	mg/L	EPA 200.7
Lead	<0.005	mg/L	EPA 200.7
Antimony	<0.020	mg/L	EPA 200.7
Selenium	<0.020	mg/L	EPA 200.7
Thallium	<0.020	mg/L	EPA 200.7
Zinc	<0.010	mg/L	EPA 200.7
ACUTE TOXICITY	<1.3	TUa	EPA Acute/Chronic Manual 2nd Edition March 1989
Ceriodaphnia dubia	<1.3	TUa	*Complete Biological Report will be sent from Fouser Environmental Services.

Approved Signatory: Joy E. Knight

Joy E. Knight
Environmental Laboratory Manager

P.O. Box 3327 • Paducah, KY 42002-3327 • email: aiilabs@bellsouth.net • www.aiilabs.com
(270) 898-8683 (270) 898-3531 Fax

A KENTUCKY CORPORATION

ANALYTICAL INDUSTRIES INCORPORATED

NVLAP

Environmental Consultants & Chemical Analysts

CLIENT: NORTH STAR STEEL KENTUCKY
P.O. BOX 468
CALVERT CITY, KY 42029

RELEASE NUMBER: 211303

PROJECT I.D.: BI-MONTHLY

DATE COLLECTED: 07-02-03

SAMPLE I.D.: OUTFALL 001

DATE RECEIVED: 07-02-03

LABORATORY I.D.: 211303-01

DATE COMPLETED: 07-09-03

ANALYTE	*RESULT*	*UNITS*	*METHOD*	*DATE ANALYZED*	*ANALYST*
Hardness	104.	mg/L as $CaCO_3$	STD. MTDS. 2340B	07/08/03	JK
Total Suspended Solids	11.	lbs/Day	EPA 160.2	07/03/03	TT
Oil and Grease	<8.	lbs/Day	EPA 1664	07/09/03	JW
pH	6.9	-----	*Client Supplied		
Temperature	81.	°F	*Client Supplied		
Dissolved Oxygen	3.9	mg/L	*Client Supplied		
Flow	0.1850	MGD	*Client Supplied		

Approved Signatory: Joy E Knight
Joy E. Knight
Environmental Laboratory Manager

P.O. Box 3327 • Paducah, KY 42002-3327 • (270) 898-8683 • Fax (270) 898-3531 • e-mail: aii@apex.net
A Kentucky Corporation

ANALYTICAL INDUSTRIES, INC.

ENVIRONMENTAL CONSULTANTS & CHEMICAL ANALYSTS

CLIENT: NORTH STAR STEEL KENTUCKY
P.O. BOX 468
CALVERT CITY, KY 42029

RELEASE NUMBER: 211243

PROJECT I.D.: BI-MONTHLY

DATE COLLECTED: 06-18-03

SAMPLE I.D.: OUTFALL 001

DATE RECEIVED: 06-18-03

LABORATORY I.D.: 211243-01

DATE COMPLETED: 06-20-03

ANALYTE	*RESULT*	*UNITS*	*METHOD*	*DATE ANALYZED*	*ANALYST*
Hardness	94.	mg/L as $CaCO_3$	STD. MTDS. 2340B	06/20/03	JK
Total Suspended Solids	8.	lbs/Day	EPA 160.2	06/18/03	TT
Oil and Grease	<3.3	lbs/Day	EPA 1664	06/19/03	TT
pH	7.3	----	*Client Supplied		
Temperature	83.	°F	*Client Supplied		
Dissolved Oxygen	6.0	mg/L	*Client Supplied		
Flow	0.0780	MGD	*Client Supplied		

Approved Signatory: Joy E Knight
Joy E. Knight
Environmental Laboratory Manager

P.O. Box 3327 • Paducah, KY 42002-3327 • email: aiilabs@bellsouth.net • www.aiilabs.com
(270) 898-8683 (270) 898-3531 Fax

A KENTUCKY CORPORATION

ANALYTICAL INDUSTRIES, INC.

ENVIRONMENTAL CONSULTANTS & CHEMICAL ANALYSTS

CLIENT: NORTH STAR STEEL KENTUCKY
P.O. BOX 468
CALVERT CITY, KY 42029

RELEASE NUMBER: 211172

PROJECT I.D.: BI-MONTHLY

DATE COLLECTED: 06-04-03

SAMPLE I.D.: OUTFALL 001

DATE RECEIVED: 06-04-03

LABORATORY I.D.: 211172-01

DATE COMPLETED: 06-09-03

ANALYTE	*RESULT*	*UNITS*	*METHOD*	*DATE ANALYZED*	*ANALYST*
Hardness	122.	mg/L as $CaCO_3$	STD. MTDS. 2340B	06/06/03	CEM
Total Suspended Solids	0.80	lbs/Day	EPA 160.2	06/04/03	TT
Oil and Grease	<0.33	lbs/Day	EPA 1664	06/09/03	JW
pH	6.9	-----	*Client Supplied		
Temperature	71.	°F	*Client Supplied		
Dissolved Oxygen	5.3	mg/L	*Client Supplied		
Flow	0.0080	MGD	*Client Supplied		

Approved Signatory: Joy E Knight
Joy E. Knight
Environmental Laboratory Manager

P.O. Box 3327 • Paducah, KY 42002-3327 • email: aiilabs@bellsouth.net • www.aiilabs.com
(270) 898-8683 (270) 898-3531 Fax
A KENTUCKY CORPORATION

ANALYTICAL INDUSTRIES, INC

ENVIRONMENTAL CONSULTANTS & CHEMICAL ANALYSTS

CLIENT: NORTH STAR STEEL KENTUCKY
P.O. BOX 468
CALVERT CITY, KY 42029

RELEASE NUMBER: 211110

PROJECT I.D.: BI-MONTHLY

DATE COLLECTED: 05-21-03

SAMPLE I.D.: OUTFALL 001

DATE RECEIVED: 05-21-03

LABORATORY I.D.: 211110-01

DATE COMPLETED: 05-23-03

ANALYTE	*RESULT*	*UNITS*	*METHOD*	*DATE ANALYZED*	*ANALYST*
Hardness	173.	mg/L as $CaCO_3$	STD. MTDS. 2340B	05/23/03	JW
Total Suspended Solids	20.	lbs/Day	EPA 160.2	05/22/03	JW
Oil and Grease	<9.8	lbs/Day	EPA 1664	05/23/03	TT
pH	7.1	-----	*Client Supplied		
Temperature	70.	°F	*Client Supplied		
Dissolved Oxygen	5.7	mg/L	*Client Supplied		
Flow	0.2350	MGD	*Client Supplied		

Approved Signatory: Joy E Knight
Joy E. Knight
Environmental Laboratory Manager

P.O. Box 3327 • Paducah, KY 42002-3327 • email: aiilabs@bellsouth.net • www.aiilabs.com
(270) 898-8683 (270) 898-3531 Fa

A KENTUCKY CORPORATION

ANALYTICAL INDUSTRIES, INC.

ENVIRONMENTAL CONSULTANTS & CHEMICAL ANALYSTS

CLIENT: NORTH STAR STEEL KENTUCKY
P.O. BOX 468
CALVERT CITY, KY 42029

RELEASE NUMBER: 211048

PROJECT I.D.: BI-MONTHLY

DATE COLLECTED: 05-07-03

SAMPLE I.D.: OUTFALL 001

DATE RECEIVED: 05-07-03

LABORATORY I.D.: 211048-01

DATE COMPLETED: 05-14-03

ANALYTE	*RESULT*	*UNITS*	*METHOD*	*DATE ANALYZED*	*ANALYST*
Hardness	105.	mg/L as $CaCO_3$	STD. MTDS. 2340B	05/14/03	JK
Total Suspended Solids	23.	lbs/Day	EPA 160.2	05/09/03	TT
Oil and Grease	<10.	lbs/Day	EPA 1664	05/10/03	JW
pH	7.5	-----	*Client Supplied		
Temperature	75.	°F	*Client Supplied		
Dissolved Oxygen	6.7	mg/L	*Client Supplied		
Flow	0.2280	MGD	*Client Supplied		

Approved Signatory: Joy E Knight
Joy E. Knight
Environmental Laboratory Manager

P.O. Box 3327 • Paducah, KY 42002-3327 • email: aiilabs@bellsouth.net • www.aiilabs.com
(270) 898-8683 (270) 898-3531 Fax

ANALYTICAL INDUSTRIES, INC.

ENVIRONMENTAL CONSULTANTS & CHEMICAL ANALYSTS

CLIENT: NORTH STAR STEEL KENTUCKY
P.O. BOX 468
CALVERT CITY, KY 42029

RELEASE NUMBER: 210951

PROJECT I.D.: BI-MONTHLY

DATE COLLECTED: 04-16-03

SAMPLE I.D.: OUTFALL 001

DATE RECEIVED: 04-16-03

LABORATORY I.D.: 210951-01

DATE COMPLETED: 04-21-03

ANALYTE	*RESULT*	*UNITS*	*METHOD*	*DATE ANALYZED*	*ANALYST*
Hardness	91.	mg/L as $CaCO_3$	STD. MTDS. 2340B	04/21/03	JK
Total Suspended Solids	0.334	lbs/Day	EPA 160.2	04/16/03	JW
Oil and Grease	<0.169	lbs/Day	EPA 1664	04/18/03	JW
pH	7.1	-----	*Client Supplied		
Temperature	68	°F	*Client Supplied		
Dissolved Oxygen	5.9	mg/L	*Client Supplied		
Flow	0.0040	MGD	*Client Supplied		

Approved Signatory: Joy E. Knight
Joy E. Knight
Environmental Laboratory Manager

P.O. Box 3327 • Paducah, KY 42002-3327 • email: aiilabs@bellsouth.net • www.aiilabs.com
(270) 898-8683 (270) 898-3531 Fax
A KENTUCKY CORPORATION

ANALYTICAL INDUSTRIES, INC.

ENVIRONMENTAL CONSULTANTS & CHEMICAL ANALYSTS

CLIENT:	NORTH STAR STEEL KENTUCKY P.O. BOX 468 CALVERT CITY, KY 42029	RELEASE NUMBER:	210876
PROJECT I.D.:	2ND QUARTER	DATE COLLECTED:	4/1-4/2
SAMPLE I.D.:	OUTFALL 001	DATE RECEIVED:	04-02-03
LABORATORY I.D.:	210876-01	DATE COMPLETED:	04-11-03

ANALYTE	*RESULT*	*UNIT*	*METHOD*
Silver	<0.020	mg/L	EPA 200.7
Arsenic	0.010	mg/L	EPA 200.7
Beryllium	<0.002	mg/L	EPA 200.7
Cadmium	<0.002	mg/L	EPA 200.7
Chromium	0.024	mg/L	EPA 200.7
Copper	<0.005	mg/L	EPA 200.7
Mercury	0.002	mg/L	EPA 245.1
Nickel	0.031	mg/L	EPA 200.7
Lead	0.006	mg/L	EPA 200.7
Antimony	<0.020	mg/L	EPA 200.7
Selenium	<0.020	mg/L	EPA 200.7
Thallium	<0.020	mg/L	EPA 200.7
Zinc	<0.010	mg/L	EPA 200.7
ACUTE TOXICITY	<1.3	TUa	EPA Acute/Chronic Manual 2nd Edition March 1989
Ceriodaphnia dubia	<1.3	TUa	*Complete Biological Report will be sent from Fouser Environmental Services.

Approved Signatory: Joy E. Knight

Joy E. Knight
Environmental Laboratory Manager

P.O. Box 3327 • Paducah, KY 42002-3327 • email: aiilabs@bellsouth.net • www.aiilabs.com
(270) 898-8683 (270) 898-3531 Fax

A KENTUCKY CORPORATION

ANALYTICAL INDUSTRIES, INC

ENVIRONMENTAL CONSULTANTS & CHEMICAL ANALYSTS

CLIENT:	NORTH STAR STEEL KENTUCKY P.O. BOX 468 CALVERT CITY, KY 42029	RELEASE NUMBER:	210876
PROJECT I.D.:	2ND QUARTER	DATE COLLECTED:	4/1-4/2
SAMPLE I.D.:	OUTFALL 001	DATE RECEIVED:	04-02-03
LABORATORY I.D.:	210876-01	DATE COMPLETED:	04-11-03

ANALYTE	*RESULT*	*UNIT*	*METHOD*
Silver	<0.020	mg/L	EPA 200.7
Arsenic	0.010	mg/L	EPA 200.7
Beryllium	<0.002	mg/L	EPA 200.7
Cadmium	<0.002	mg/L	EPA 200.7
Chromium	0.024	mg/L	EPA 200.7
Copper	<0.005	mg/L	EPA 200.7
Mercury	0.002	mg/L	EPA 245.1
Nickel	0.031	mg/L	EPA 200.7
Lead	0.006	mg/L	EPA 200.7
Antimony	<0.020	mg/L	EPA 200.7
Selenium	<0.020	mg/L	EPA 200.7
Thallium	<0.020	mg/L	EPA 200.7
Zinc	<0.010	mg/L	EPA 200.7
ACUTE TOXICITY	<1.3	TUa	EPA Acute/Chronic Manual 2nd Edition March 1989
Ceriodaphnia dubia	<1.3	TUa	*Complete Biological Report will be sent from Fouser Environmental Services.

Approved Signatory: Joy E. Knight

Joy E. Knight
Environmental Laboratory Manager

P.O. Box 3327 • Paducah, KY 42002-3327 • email: aiilabs@bellsouth.net • www.aiilabs.com
(270) 898-8683 (270) 898-3531 F

ANALYTICAL INDUSTRIES, INC.

ENVIRONMENTAL CONSULTANTS & CHEMICAL ANALYSTS

CLIENT: NORTH STAR STEEL KENTUCKY
P.O. BOX 468
CALVERT CITY, KY 42029

RELEASE NUMBER: 210877

PROJECT I.D.: BI-MONTHLY

DATE COLLECTED: 04-02-03

SAMPLE I.D.: OUTFALL 001

DATE RECEIVED: 04-02-03

LABORATORY I.D.: 210877-01

DATE COMPLETED: 04-11-03

ANALYTE	*RESULT*	*UNITS*	*METHOD*	*DATE ANALYZED*	*ANALYST*
Hardness	90.	mg/L as $CaCO_3$	STD. MTDS. 2340B	04/11/03	JK
Total Suspended Solids	9.	lbs/Day	EPA 160.2	04/03/03	JW
Oil and Grease	<1.3	lbs/Day	EPA 1664	04/04/03	JW
pH	7.2	-----	*Client Supplied		
Temperature	61.	°F	*Client Supplied		
Dissolved Oxygen	7.3	mg/L	*Client Supplied		
Flow	0.0300	MGD	*Client Supplied		

Approved Signatory: Joy E. Knight
Joy E. Knight
Environmental Laboratory Manager

P.O. Box 3327 • Paducah, KY 42002-3327 • email: aiilabs@bellsouth.net • www.aiilabs.com
(270) 898-8683 (270) 898-3531 Fax

A KENTUCKY CORPORATION

ANALYTICAL INDUSTRIES, INC.

ENVIRONMENTAL CONSULTANTS & CHEMICAL ANALYSTS

CLIENT: NORTH STAR STEEL KENTUCKY
P.O. BOX 468
CALVERT CITY, KY 42029

RELEASE NUMBER: 210826

PROJECT I.D.: BI-MONTHLY

DATE COLLECTED: 03-19-03

SAMPLE I.D.: OUTFALL 001

DATE RECEIVED: 03-19-03

LABORATORY I.D.: 210826-01

DATE COMPLETED: 04-11-03

ANALYTE	*RESULT*	*UNITS*	*METHOD*	*DATE ANALYZED*	*ANALYST*
Hardness	134.	mg/L as $CaCO_3$	STD. MTDS. 2340B	04/11/03	JK
Total Suspended Solids	9.	lbs/Day	EPA 160.2	03/20/03	JW
Oil and Grease	<3.5	lbs/Day	EPA 1664	03/20/03	JW
pH	7.0	-----	*Client Supplied		
Temperature	63.	°F	*Client Supplied		
Dissolved Oxygen	9.7	mg/L	*Client Supplied		
Flow	0.0830	MGD	*Client Supplied		

Approved Signatory: Joy E. Knight
Joy E. Knight
Environmental Laboratory Manager

P.O. Box 3327 • Paducah, KY 42002-3327 • email: aiilabs@bellsouth.net • www.aiilabs.com
(270) 898-8683 (270) 898-3531 Fax

A KENTUCKY CORPORATION

ANALYTICAL INDUSTRIES, INC.

ENVIRONMENTAL CONSULTANTS & CHEMICAL ANALYSTS

CLIENT: NORTH STAR STEEL KENTUCKY
P.O. BOX 468
CALVERT CITY, KY 42029

RELEASE NUMBER: 210758

PROJECT I.D.: BI-MONTHLY

DATE COLLECTED: 03-05-03

SAMPLE I.D.: OUTFALL 001

DATE RECEIVED: 03-05-03

LABORATORY I.D.: 210758-01

DATE COMPLETED: 03-11-03

ANALYTE	*RESULT*	*UNITS*	*METHOD*	*DATE ANALYZED*	*ANALYST*
Hardness	125.	mg/L as $CaCO_3$	STD. MTDS. 2340B	03/11/03	JK
Total Suspended Solids	1.5	lbs/Day	EPA 160.2	03/07/03	JW
Oil and Grease	<1.0	lbs/Day	EPA 1664	03/07/03	JW
pH	7.0	-----	*Client Supplied		
Temperature	51	°F	*Client Supplied		
Dissolved Oxygen	10.5	mg/L	*Client Supplied		
Flow	0.0250	MGD	*Client Supplied		

Approved Signatory: Joy E Knight
Joy E. Knight
Environmental Laboratory Manager

P.O. Box 3327 • Paducah, KY 42002-3327 • email: aiilabs@bellsouth.net • www.aiilabs.com
(270) 898-8683 (270) 898-3531 Fax

A KENTUCKY CORPORATION

ANALYTICAL INDUSTRIES INCORPORATED
(270) 898-8683
(270) 898-3531 Fax
email: allabs@bellsouth.net
P.O. Box 3327
Paducah, KY 42002-3327

CLIENT: NORTH STAR STEEL KENTUCKY
P.O. BOX 468
CALVERT CITY, KY 42029

RELEASE NUMBER: 210700

PROJECT I.D.: BI-MONTHLY

DATE COLLECTED: 02-19-03

SAMPLE I.D.: OUTFALL 001

DATE RECEIVED: 02-19-03

LABORATORY I.D.: 210700-01

DATE COMPLETED: 02-24-03

ANALYTE	*RESULT*	*UNITS*	*METHOD*	*DATE ANALYZED*	*ANALYST*
Hardness	98.	mg/L as $CaCO_3$	STD. MTDS. 2340B	02/24/03	JK
Total Suspended Solids	31.	lbs/Day	EPA 160.2	02/20/03	JW
Oil and Grease	<8.	lbs/Day	EPA 1664	02/22/03	JW
pH	7.1	-----	*Client Supplied		
Temperature	43	°F	*Client Supplied		
Dissolved Oxygen	12.9	mg/L	*Client Supplied		
Flow	0.1850	MGD	*Client Supplied		

Approved Signatory: Joy E. Knight
Joy E. Knight
Environmental Laboratory Manager

ANALYTICAL INDUSTRIES INCORPORATED
(270) 898-8683
(270) 898-3531 Fax
email: allabs@bellsouth.net
P.O. Box 3327
Paducah, KY 42002-3327

CLIENT: NORTH STAR STEEL KENTUCKY
P.O. BOX 468
CALVERT CITY, KY 42029

RELEASE NUMBER: 210651

PROJECT I.D.: BI-MONTHLY

DATE COLLECTED: 02-05-03

SAMPLE I.D.: OUTFALL 001

DATE RECEIVED: 02-05-03

LABORATORY I.D.: 210651-01

DATE COMPLETED: 02-08-03

ANALYTE	*RESULT*	*UNITS*	*METHOD*	*DATE ANALYZED*	*ANALYST*
Hardness	102.	mg/L as $CaCO_3$	STD. MTDS. 2340B	02/07/03	JK
Total Suspended Solids	1.4	lbs/Day	EPA 160.2	02/06/03	JW
Oil and Grease	<2.0	lbs/Day	EPA 1664	02/08/03	JW
pH	7.2	-----	*Client Supplied		
Temperature	46	°F	*Client Supplied		
Dissolved Oxygen	12.8	mg/L	*Client Supplied		
Flow	0.0480	MGD	*Client Supplied		

Approved Signatory: Joy E Knight
Joy E. Knight
Environmental Laboratory Manager

ANALYTICAL INDUSTRIES INCORPORATED
(270) 898-8683
(270) 898-3531 Fax
email: allabs@bellsouth.net
P.O. Box 3327
Paducah, KY 42002-3327

CLIENT: NORTH STAR STEEL KENTUCKY
P.O. BOX 468
CALVERT CITY, KY 42029

RELEASE NUMBER: 210597

PROJECT I.D.: BI-MONTHLY

DATE COLLECTED: 01-22-03

SAMPLE I.D.: OUTFALL 001

DATE RECEIVED: 01-22-03

LABORATORY I.D.: 210597-01

DATE COMPLETED: 01-28-03

ANALYTE	*RESULT*	*UNITS*	*METHOD*	*DATE ANALYZED*	*ANALYST*
Hardness	99.	mg/L as $CaCO_3$	STD. MTDS. 2340B	01/28/03	JJ
Total Suspended Solids	0.801	lbs/Day	EPA 160.2	01/23/03	JW
Oil and Grease	<1.00	lbs/Day	EPA 1664	01/23/03	JK
pH	6.9	-----	*Client Supplied		
Temperature	39	°F	*Client Supplied		
Dissolved Oxygen	11.5	mg/L	*Client Supplied		
Flow	0.0240	MGD	*Client Supplied		

Approved Signatory: Joy E Knight
Joy E. Knight
Env. Laboratory Manager

ANALYTICAL INDUSTRIES INCORPORATED

(270) 898-8683
(270) 898-3531 Fax
email: allabs@bellsouth.net

P.O. Box 3327
Paducah, KY 42002-3327

CLIENT:	NORTH STAR STEEL KENTUCKY P.O. BOX 468 CALVERT CITY, KY 42029	RELEASE NUMBER:	210570
PROJECT I.D.:	1ST QUARTER	DATE COLLECTED:	1/14 & 1/15
SAMPLE I.D.:	OUTFALL 001	DATE RECEIVED:	01-15-03
LABORATORY I.D.:	210570-01	DATE COMPLETED:	01-29-03

ANALYTE	*RESULT*	*UNIT*	*METHOD*
Silver	<0.020	mg/L	EPA 200.7
Arsenic	<0.005	mg/L	EPA 200.7
Beryllium	<0.002	mg/L	EPA 200.7
Cadmium	<0.002	mg/L	EPA 200.7
Chromium	<0.010	mg/L	EPA 200.7
Copper	0.008	mg/L	EPA 200.7
Mercury	<0.0005	mg/L	EPA 245.1
Nickel	0.025	mg/L	EPA 200.7
Lead	<0.005	mg/L	EPA 200.7
Antimony	<0.020	mg/L	EPA 200.7
Selenium	<0.020	mg/L	EPA 200.7
Thallium	<0.020	mg/L	EPA 200.7
Zinc	<0.010	mg/L	EPA 200.7
ACUTE TOXICITY			EPA Acute/Chronic Manual 2nd Edition March 1989
	<1.3	TUa	
Pimephales promelas	<1.3	TUa	
Ceriodaphnia dubia	<1.3	TUa	

*Complete Biological Report will be sent from Fouser Environmental Services.

Approved Signatory: Joy E Knight

Joy E. Knight
Env. Laboratory Manager

ANALYTICAL INDUSTRIES INCORPORATED
(270) 898-8683
(270) 898-3531 Fax
email: allabs@bellsouth.net
P.O. Box 3327
Paducah, KY 42002-3327

CLIENT: NORTH STAR STEEL KENTUCKY
P.O. BOX 468
CALVERT CITY, KY 42029

RELEASE NUMBER: 210539

PROJECT I.D.: BI-MONTHLY

DATE COLLECTED: 01-08-03

SAMPLE I.D.: OUTFALL 001

DATE RECEIVED: 01-08-03

LABORATORY I.D.: 210539-01

DATE COMPLETED: 01-21-03

ANALYTE	*RESULT*	*UNITS*	*METHOD*	*DATE ANALYZED*	*ANALYST*
Hardness	96.	mg/L as $CaCO_3$	STD. MTDS. 2340B	01/21/03	JJ
Total Suspended Solids	2.936	lbs/Day	EPA 160.2	01/10/03	TT
Oil and Grease	<1.835	lbs/Day	EPA 1664	01/14/03	JK
pH	7.2	-----	*Client Supplied		
Temperature	46.	°F	*Client Supplied		
Dissolved Oxygen	10.5	mg/L	*Client Supplied		
Flow	0.0440	MGD	*Client Supplied		

Approved Signatory: Joy E Knight
Joy E. Knight
Env. Laboratory Manager

ANALYTICAL INDUSTRIES, INC.

ENVIRONMENTAL CONSULTANTS & CHEMICAL ANALYSTS

CLIENT: NORTH STAR STEEL KENTUCKY
P.O. BOX 468
CALVERT CITY, KY 42029

PAGE 1 OF 1

RELEASE NUMBER: 211440

PROJECT I.D.: PERMIT RENEWAL

DATE COLLECTED: 08-06-03

SAMPLE I.D.: OUTFALL 002

DATE RECEIVED: 08-06-03

LABORATORY I.D.: 211440-01

DATE COMPLETED: 08-14-03

ANALYTE	*RESULT*	*UNITS*	*METHOD*	*DATE ANALYZED*	*ANALYST*
Biological Oxygen Demand	<3.	mg/L	STD. MTDS. 5210B	8/12/03	JW
Total Suspended Solids	<2.	mg/L	EPA 160.2	8/7/03	JW
pH	6.01	Std. Units	EPA 150.1	8/6/03	JK
Chloride	91.	mg/L	EPA 325.2	8/7/03	JW
Chemical Oxygen Demand	12.	mg/L	EPA 410.4	8/7/03	JW
Ammonia	<0.10	mg/L	EPA 350.3	8/8/03	JK
Total Organic Carbon	24.0	mg/L	EPA 415.1	8/12/03	SE
Fecal Coliform	<10.	CFU/100mL	STD. MTDS. 9222D	8/6/03	JK
Hardness	170.	mg/L as $CaCO_3$	STD. MTDS. 2340B	8/13/03	JK
Cadmium	<0.002	mg/L	EPA 200.7	8/13/03	JK
Chromium	0.022	mg/L	EPA 200.7	8/13/03	JK
Copper	0.015	mg/L	EPA 200.7	8/13/03	JK
Iron	0.054	mg/L	EPA 200.7	8/13/03	JK
Manganese	0.013	mg/L	EPA 200.7	8/13/03	JK
Nickel	<0.010	mg/L	EPA 200.7	8/13/03	JK
Zinc	0.025	mg/L	EPA 200.7	8/13/03	JK
Temperature	88.	°F	-----	*CLIENT SUPPLIED	
Dissolved Oxygen	5.2	mg/L	-----	*CLIENT SUPPLIED	
Flow	0.00024	MGD	-----	*CLIENT SUPPLIED	

Approved Signatory: Joy E Knight
Joy Knight
Environmental Laboratory Manager

P.O. Box 3327 • Paducah, KY 42002-3327 • email: aillabs@bellsouth.net • www.aillabs.com
(270) 898-8683 (270) 898-3531 Fax
A KENTUCKY CORPORATION

ANALYTICAL INDUSTRIES INCORPORATED

NVLAP

Environmental Consultants & Chemical Analysts

CLIENT: NORTH STAR STEEL KENTUCKY
P.O. BOX 468
CALVERT CITY, KY 42029

RELEASE NUMBER: 211326

PROJECT I.D.: MONTHLY

DATE COLLECTED: 07-09-03

SAMPLE I.D.: OUTFALL 002

DATE RECEIVED: 07-09-03

LABORATORY I.D.: 211326-01

DATE COMPLETED: 07-16-03

ANALYTE	*RESULT*	*UNITS*	*METHOD*	*DATE ANALYZED*	*ANALYST*
Biological Oxygen Demand	<3.	mg/L	STD. MTDS. 5210B	07/16/03	JW
Total Suspended Solids	<2.	mg/L	EPA 160.2	07/09/03	JW
Fecal Coliform	<10.	CFU/100mL	STD. MTDS. 9222D	07/09/03	JK
Ammonia	0.13	mg/L	EPA 350.3	07/11/03	JW
pH	7.1	-----	*Client Supplied		
Temperature	85.	°F	*Client Supplied		
Dissolved Oxygen	6.1	mg/L	*Client Supplied		
Flow	0.00018	MGD	*Client Supplied		

Approved Signatory: Joy E Knight
Joy E. Knight
Environmental Laboratory Manager

P.O. Box 3327 • Paducah, KY 42002-3327 • (270) 898-8683 • Fax (270) 898-3531 • e-mail: aii@apex.net
A Kentucky Corporation

ANALYTICAL INDUSTRIES, INC.

ENVIRONMENTAL CONSULTANTS & CHEMICAL ANALYSTS

CLIENT: NORTH STAR STEEL KENTUCKY
P.O. BOX 468
CALVERT CITY, KY 42029

RELEASE NUMBER: 211205

PROJECT I.D.: MONTHLY

DATE COLLECTED: 06-11-03

SAMPLE I.D.: OUTFALL 002

DATE RECEIVED: 06-11-03

LABORATORY I.D.: 211205-01

DATE COMPLETED: 06-16-03

ANALYTE	*RESULT*	*UNITS*	*METHOD*	*DATE ANALYZED*	*ANALYST*
Biological Oxygen Demand	<3.	mg/L	STD. MTDS. 5210B	06/11/03	TT
Total Suspended Solids	3.	mg/L	EPA 160.2	06/11/03	TT
Fecal Coliform	<10.	CFU/100mL	STD. MTDS. 9222D	06/11/03	JW
Ammonia	0.33	mg/L	EPA 350.3	06/11/03	TT
pH	6.9	-----	*Client Supplied		
Temperature	71.	°F	*Client Supplied		
Dissolved Oxygen	6.5	mg/L	*Client Supplied		
Flow	0.00024	MGD	*Client Supplied		

Approved Signatory: Joy E Knight
Joy E. Knight
Environmental Laboratory Manager

P.O. Box 3327 • Paducah, KY 42002-3327 • email: aillabs@bellsouth.net • www.aillabs.com
(270) 898-8683 (270) 898-3531 Fax

A KENTUCKY CORPORATION

ANALYTICAL INDUSTRIES, INC.

ENVIRONMENTAL CONSULTANTS & CHEMICAL ANALYSTS

CLIENT: NORTH STAR STEEL KENTUCKY
P.O. BOX 468
CALVERT CITY, KY 42029

RELEASE NUMBER: 211081

PROJECT I.D.: MONTHLY

DATE COLLECTED: 05-14-03

SAMPLE I.D.: OUTFALL 002

DATE RECEIVED: 05-14-03

LABORATORY I.D.: 211081-01

DATE COMPLETED: 05-20-03

ANALYTE	*RESULT*	*UNITS*	*METHOD*	*DATE ANALYZED*	*ANALYST*
Biological Oxygen Demand	<3.	mg/L	STD. MTDS. 5210B	05/15/03	JW
Total Suspended Solids	4.	mg/L	EPA 160.2	05/16/03	TT
Fecal Coliform	<10.	CFU/100mL	STD. MTDS. 9222D	05/14/03	TT
Ammonia	0.20	mg/L	EPA 350.3	05/14/03	TT
pH	7.1	-----	*Client Supplied		
Temperature	65.	°F	*Client Supplied		
Dissolved Oxygen	7.0	mg/L	*Client Supplied		
Flow	0.00018	MGD	*Client Supplied		

Approved Signatory: Dammie Ayler
for Joy E. Knight
Environmental Laboratory Manager

P.O. Box 3327 • Paducah, KY 42002-3327 • email: aiilabs@bellsouth.net • www.aiilabs.com
(270) 898-8683 (270) 898-3531 Fax

A KENTUCKY CORPORATION

ANALYTICAL INDUSTRIES, INC.

ENVIRONMENTAL CONSULTANTS & CHEMICAL ANALYSTS

CLIENT: NORTH STAR STEEL KENTUCKY
P.O. BOX 468
CALVERT CITY, KY 42029

RELEASE NUMBER: 210922

PROJECT I.D.: MONTHLY

DATE COLLECTED: 04-09-03

SAMPLE I.D.: OUTFALL 002

DATE RECEIVED: 04-09-03

LABORATORY I.D.: 210922-01

DATE COMPLETED: 04-15-03

ANALYTE	*RESULT*	*UNITS*	*METHOD*	*DATE ANALYZED*	*ANALYST*
Biological Oxygen Deman	<3.	mg/L	STD. MTDS. 5210B	04/10/03	JW
Total Suspended Solids	<2.	mg/L	EPA 160.2	04/10/03	TT
Fecal Coliform	<10.	CFU/100mL	STD. MTDS. 9222D	04/09/03	JK
Ammonia	<0.10	mg/L	EPA 350.3	04/10/03	TT
pH	7.1	-----	*Client Supplied		
Temperature	52.	°F	*Client Supplied		
Dissolved Oxygen	12.3	mg/L	*Client Supplied		
Flow	0.00018	MGD	*Client Supplied		

Approved Signatory: Joy E Knight
Joy E. Knight
Environmental Laboratory Manager

P.O. Box 3327 • Paducah, KY 42002-3327 • email: aiilabs@bellsouth.net • www.aiilabs.com
(270) 898-8683 (270) 898-3531 Fax

A KENTUCKY CORPORATION

ANALYTICAL INDUSTRIES, INC.

ENVIRONMENTAL CONSULTANTS & CHEMICAL ANALYSTS

CLIENT: NORTH STAR STEEL KENTUCKY
P.O. BOX 468
CALVERT CITY, KY 42029

RELEASE NUMBER: 210784

PROJECT I.D.: MONTHLY

DATE COLLECTED: 03-12-03

SAMPLE I.D.: OUTFALL 002

DATE RECEIVED: 03-12-03

LABORATORY I.D.: 210784-01

DATE COMPLETED: 03-17-03

ANALYTE	*RESULT*	*UNITS*	*METHOD*	*DATE ANALYZED*	*ANALYST*
Biological Oxygen Deman	5.	mg/L	STD. MTDS. 5210B	03/12/03	JW
Total Suspended Solids	<2.	mg/L	EPA 160.2	03/14/03	JW
Fecal Coliform	<10.	CFU/100mL	STD. MTDS. 9222D	03/13/03	JK
Ammonia	<0.10	mg/L	EPA 350.3	03/14/03	TT
pH	6.9	-----	*Client Supplied		
Temperature	49	°F	*Client Supplied		
Dissolved Oxygen	11.3	mg/L	*Client Supplied		
Flow	0.00018	MGD	*Client Supplied		

Approved Signatory: Joy E Knight
Joy E. Knight
Environmental Laboratory Manager

P.O. Box 3327 • Paducah, KY 42002-3327 • email: aiilabs@bellsouth.net • www.aiilabs.com
(270) 898-8683 (270) 898-3531 Fax

A KENTUCKY CORPORATION

ANALYTICAL INDUSTRIES INCORPORATED

(270) 898-8683
(270) 898-3531 Fax
email: aillabs@bellsouth.net

P.O. Box 3327
Paducah, KY 42002-3327

CLIENT: NORTH STAR STEEL KENTUCKY
P.O. BOX 468
CALVERT CITY, KY 42029

RELEASE NUMBER: 210676

PROJECT I.D.: MONTHLY

DATE COLLECTED: 02-12-03

SAMPLE I.D.: OUTFALL 002

DATE RECEIVED: 02-12-03

LABORATORY I.D.: 210676-01

DATE COMPLETED: 02-17-03

ANALYTE	*RESULT*	*UNITS*	*METHOD*	*DATE ANALYZED*	*ANALYST*
Biological Oxygen Deman	6.	mg/L	STD. MTDS. 5210B	02/12/03	JW
Total Suspended Solids	<2.	mg/L	EPA 160.2	02/13/03	JW
Fecal Coliform	<10.	CFU/100mL	STD. MTDS. 9212B.2.b.c. & 9222D	02/13/03	JW
Ammonia	<0.10	mg/L	EPA 350.3	02/13/03	TT
pH	7.1	-----	*Client Supplied		
Temperature	42.	°F	*Client Supplied		
Dissolved Oxygen	10.5	mg/L	*Client Supplied		
Flow	0.00018	MGD	*Client Supplied		

Approved Signatory: Joy E Knight
Joy E. Knight
Env. Laboratory Manager

ANALYTICAL INDUSTRIES INCORPORATED

(270) 898-8683
(270) 898-3531 Fax
email: allabs@bellsouth.net

P.O. Box 3327
Paducah, KY 42002-3327

CLIENT: NORTH STAR STEEL KENTUCKY
P.O. BOX 468
CALVERT CITY, KY 42029

RELEASE NUMBER: 210569

PROJECT I.D.: MONTHLY

DATE COLLECTED: 01-15-03

SAMPLE I.D.: OUTFALL 002

DATE RECEIVED: 01-15-03

LABORATORY I.D.: 210569-01

DATE COMPLETED: 01-21-03

ANALYTE	*RESULT*	*UNITS*	*METHOD*	*DATE ANALYZED*	*ANALYST*
Biological Oxygen Deman	<3.	mg/L	STD. MTDS. 5210B	01/16/03	TT
Total Suspended Solids	2.	mg/L	EPA 160.2	01/16/03	JW
Fecal Coliform	<10.	CFU/100mL	STD. MTDS. 9212B.2.b.c. & 9222D	01/16/03	TT
Ammonia	<0.10	mg/L	EPA 350.3	01/15/03	JW
pH	7.1	-----	*Client Supplied		
Temperature	44	°F	*Client Supplied		
Dissolved Oxygen	14.2	mg/L	*Client Supplied		
Flow	0.00018	MGD	*Client Supplied		

Approved Signatory: Joy E Knight
Joy E. Knight
Env. Laboratory Manager

ANALYTICAL INDUSTRIES INCORPORATED
(270) 898-8683
(270) 898-3531 Fax
email: ailiabs@bellsouth.net
P.O. Box 3327
Paducah, KY 42002-3327

CLIENT: NORTH STAR STEEL KENTUCKY
P.O. BOX 468
CALVERT CITY, KY 42029

RELEASE NUMBER: 210416

PROJECT I.D.: MONTHLY

DATE COLLECTED: 12-11-02

SAMPLE I.D.: OUTFALL 002

DATE RECEIVED: 12-11-02

LABORATORY I.D.: 210416-01

DATE COMPLETED: 12-17-02

ANALYTE	*RESULT*	*UNITS*	*METHOD*	*DATE ANALYZED*	*ANALYST*
Biological Oxygen Deman	<3.	mg/L	STD. MTDS. 5210B	12/12/02	TT
Total Suspended Solids	<2.	mg/L	EPA 160.2	12/13/02	TT
Fecal Coliform	<10.	CFU/100mL	STD. MTDS. 9212B.2.b.c. & 9222D	12/11/02	JJ
Ammonia	<0.10	mg/L	EPA 350.3	12/17/02	TT
pH	7.1	-----	*Client Supplied		
Temperature	48.	°F	*Client Supplied		
Dissolved Oxygen	9.5	mg/L	*Client Supplied		
Flow	0.00018	MGD	*Client Supplied		

DChavis
1/2/03

Approved Signatory:
Jason R. Joyce, M.S.
Env. Laboratory Manager

ANALYTICAL INDUSTRIES INCORPORATED
(270) 898-8683
(270) 898-3531 Fax
email: allabs@bellsouth.net
P.O. Box 3327
Paducah, KY 42002-3327

CLIENT: NORTH STAR STEEL KENTUCKY
P.O. BOX 468
CALVERT CITY, KY 42029

RELEASE NUMBER: 210297

PROJECT I.D.: MONTHLY

DATE COLLECTED: 11-13-02

SAMPLE I.D.: OUTFALL 002

DATE RECEIVED: 11-13-02

LABORATORY I.D.: 210297-01

DATE COMPLETED: 11-19-02

ANALYTE	*RESULT*	*UNITS*	*METHOD*	*DATE ANALYZED*	*ANALYST*
Biological Oxygen Deman	<3.	mg/L	STD. MTDS. 5210B	11/14/02	TT
Total Suspended Solids	<2.	mg/L	EPA 160.2	11/19/02	TT
Fecal Coliform	<10.	CFU/100mL	STD. MTDS. 9212B.2.b.c. & 9222D	11/13/02	TT
Ammonia	<0.10	mg/L	EPA 350.3	11/20/02	TT
pH	7.2	-----	*Client Supplied		
Temperature	50.	°F	*Client Supplied		
Dissolved Oxygen	6.5	mg/L	*Client Supplied		
Flow	0.00012	MGD	*Client Supplied		

Approved Signatory: _____
Jason R. Joyce
Env. Laboratory Manager

ANALYTICAL INDUSTRIES INCORPORATED

NVLAP

Environmental Consultants & Chemical Analysts

CLIENT: NORTH STAR STEEL KENTUCKY
P.O. BOX 468
CALVERT CITY, KY 42029

RELEASE NUMBER: 210136

PROJECT I.D.: MONTHLY

DATE COLLECTED: 10-09-02

SAMPLE I.D.: OUTFALL 002

DATE RECEIVED: 10-09-02

LABORATORY I.D.: 210136-01

DATE COMPLETED: 10-15-02

ANALYTE	*RESULT*	*UNITS*	*METHOD*	*DATE ANALYZED*	*ANALYST*
Biological Oxygen Deman	4.	mg/L	STD. MTDS. 5210B	10/10/02	TT
Total Suspended Solids	2.	mg/L	EPA 160.2	10/11/02	TT
Fecal Coliform	<10.	CFU/100mL	STD. MTDS. 9212B.2.b.c. & 9222D	10/09/02	TT
Ammonia	<0.10	mg/L	EPA 350.3	10/14/02	TT
pH	7.2	-----	*Client Supplied		
Temperature	72.	°F	*Client Supplied		
Dissolved Oxygen	5.8	mg/L	*Client Supplied		
Flow	0.00012	MGD	*Client Supplied		

Approved Signatory: _____
Jason R. Joyce
Env. Laboratory Manager

P.O. Box 3327 • Paducah, KY 42002-3327 • (270) 898-8683 • Fax (270) 898-3531 • e-mail: aiilabs@bellsouth.net
A Kentucky Corporation

ANALYTICAL INDUSTRIES INCORPORATED

Environmental Consultants & Chemical Analysts

NVLAP

CLIENT: NORTH STAR STEEL KENTUCKY
P.O. BOX 468
CALVERT CITY, KY 42029

RELEASE NUMBER: 210010

PROJECT I.D.: MONTHLY

DATE COLLECTED: 09-11-02

SAMPLE I.D.: OUTFALL 002

DATE RECEIVED: 09-11-02

LABORATORY I.D.: 210010-01

DATE COMPLETED: 09-17-02

ANALYTE	*RESULT*	*UNITS*	*METHOD*	*DATE ANALYZED*	*ANALYST*
Biological Oxygen Deman	<3.	mg/L	STD. MTDS. 5210B	09/12/02	TT
Total Suspended Solids	63.	mg/L	EPA 160.2	09/11/02	TT
Fecal Coliform	<10.	CFU/100mL	STD. MTDS. 9212B.2.b.c. & 9222D	09/11/02	TT
Ammonia	<0.10	mg/L	EPA 350.3	09/12/02	TT
pH	7.1	-----	*Client Supplied		
Temperature	82.	°F	*Client Supplied		
Dissolved Oxygen	5.3	mg/L	*Client Supplied		
Flow	0.00018	MGD	*Client Supplied		

Approved Signatory:

Jason R. Joyce
Env. Laboratory Manager

P.O. Box 3327 • Paducah, KY 42002-3327 • (270) 898-8683 • Fax (270) 898-3531 • e-mail: aiilabs@bellsouth.net
A Kentucky Corporation

ANALYTICAL INDUSTRIES, INC.

ENVIRONMENTAL CONSULTANTS & CHEMICAL ANALYSTS

CLIENT:	NORTH STAR STEEL KENTUCKY P.O. BOX 468 CALVERT CITY, KY 42029		PAGE 1 OF 1
		RELEASE NUMBER:	211441
PROJECT I.D.:	PERMIT RENEWAL	DATE COLLECTED:	08-06-03
SAMPLE I.D.:	OUTFALL 003	DATE RECEIVED:	08-06-03
LABORATORY I.D.:	211441-01	DATE COMPLETED:	08-14-03

ANALYTE	*RESULT*	*UNITS*	*METHOD*	*DATE ANALYZED*	*ANALYST*
Biological Oxygen Demand	9.	mg/L	STD. MTDS. 5210B	8/12/03	JW
Total Suspended Solids	28.	mg/L	EPA 160.2	8/7/03	JW
pH	6.02	Std. Units	EPA 150.1	8/6/03	JK
Chloride	87.	mg/L	EPA 325.2	8/7/03	JW
Chemical Oxygen Demand	82.	mg/L	EPA 410.4	8/7/03	JW
Ammonia	<0.10	mg/L	EPA 350.3	8/8/03	JK
Total Organic Carbon	40.0	mg/L	EPA 415.1	8/12/03	SE
Hardness	87.	mg/L as $CaCO_3$	STD. MTDS. 2340B	8/13/03	JK
Oil & Grease	<5.	mg/L	EPA 1664	8/9/03	JW
Cadmium	<0.002	mg/L	EPA 200.7	8/13/03	JK
Copper	0.008	mg/L	EPA 200.7	8/13/03	JK
Iron	1.430	mg/L	EPA 200.7	8/13/03	JK
Manganese	0.215	mg/L	EPA 200.7	8/13/03	JK
Molybdenum	0.231	mg/L	EPA 200.7	8/13/03	JK
Nickel	0.011	mg/L	EPA 200.7	8/13/03	JK
Zinc	<0.010	mg/L	EPA 200.7	8/13/03	JK
Temperature	84.	°F	-----	*CLIENT SUPPLIED	
Dissolved Oxygen	5.6	mg/L	-----	*CLIENT SUPPLIED	
Flow	0.007	MGD	-----	*CLIENT SUPPLIED	

Approved Signatory: Joy E Knight
Joy Knight
Environmental Laboratory Manager

P.O. Box 3327 • Paducah, KY 42002-3327 • email: aillabs@bellsouth.net • www.aillabs.com
(270) 898-8683 (270) 898-3531 Fax
A KENTUCKY CORPORATION

ANALYTICAL INDUSTRIES, INC.

ENVIRONMENTAL CONSULTANTS & CHEMICAL ANALYSTS

CLIENT:	NORTH STAR STEEL KENTUCKY P.O. BOX 468 CALVERT CITY, KY 42029	RELEASE NUMBER:	210876
PROJECT I.D.:	2ND QUARTER	DATE COLLECTED:	4/1-4/2
SAMPLE I.D.:	OUTFALL 003	DATE RECEIVED:	04-02-03
LABORATORY I.D.:	210876-02	DATE COMPLETED:	04-11-03

ANALYTE	*RESULT*	*UNIT*	*METHOD*
Silver	<0.020	mg/L	EPA 200.7
Arsenic	0.010	mg/L	EPA 200.7
Beryllium	<0.002	mg/L	EPA 200.7
Cadmium	<0.002	mg/L	EPA 200.7
Chromium	0.016	mg/L	EPA 200.7
Copper	0.009	mg/L	EPA 200.7
Mercury	<0.0005	mg/L	EPA 245.1
Nickel	<0.010	mg/L	EPA 200.7
Lead	0.013	mg/L	EPA 200.7
Antimony	<0.020	mg/L	EPA 200.7
Selenium	<0.020	mg/L	EPA 200.7
Thallium	<0.020	mg/L	EPA 200.7
Zinc	0.014	mg/L	EPA 200.7

Approved Signatory: Joy E. Knight

Joy E. Knight
Environmental Laboratory Manager

P.O. Box 3327 • Paducah, KY 42002-3327 • email: aiilabs@bellsouth.net • www.aiilabs.com
(270) 898-8683 (270) 898-3531 Fax

ANALYTICAL INDUSTRIES INCORPORATED

NVLAP

Environmental Consultants & Chemical Analysts

CLIENT: NORTH STAR STEEL KENTUCKY
P.O. BOX 468
CALVERT CITY, KY 42029

RELEASE NUMBER: 211304

PROJECT I.D.: STORMWATER

DATE COLLECTED: 07-02-03

SAMPLE I.D.: OUTFALL 003

DATE RECEIVED: 07-02-03

LABORATORY I.D.: 211304-01

DATE COMPLETED: 07-09-03

ANALYTE	*RESULT*	*UNITS*	*METHOD*	*DATE ANALYZED*	*ANALYST*
Hardness	107.	mg/L as $CaCO_3$	STD. MTDS. 2340B	07/08/03	JK
Total Suspended Solids	7.	mg/L	EPA 160.2	07/03/03	TT
Oil and Grease	<5.	mg/L	EPA 1664	07/09/03	JW
pH	7.0	-----	*Client Supplied		
Temperature	82.	°F	*Client Supplied		
Dissolved Oxygen	4.3	mg/L	*Client Supplied		
Flow	0.0070	MGD	*Client Supplied		

Approved Signatory: Joy E Knight
Joy E. Knight
Environmental Laboratory Manager

P.O. Box 3327 • Paducah, KY 42002-3327 • (270) 898-8683 • Fax (270) 898-3531 • e-mail: ali@apex.net
A Kentucky Corporation

ANALYTICAL INDUSTRIES, INC

ENVIRONMENTAL CONSULTANTS & CHEMICAL ANALYSTS

CLIENT: NORTH STAR STEEL KENTUCKY
P.O. BOX 468
CALVERT CITY, KY 42029

RELEASE NUMBER: 21117

PROJECT I.D.: STORMWATER

DATE COLLECTED: 06-04-0

SAMPLE I.D.: OUTFALL 003

DATE RECEIVED: 06-04-0

LABORATORY I.D.: 211173-01

DATE COMPLETED: 06-09-0

ANALYTE	*RESULT*	*UNITS*	*METHOD*	*DATE ANALYZED*	*ANALYST*
Hardness	146.	mg/L as $CaCO_3$	STD. MTDS. 2340B	06/06/03	CEM
Total Suspended Solids	11.	mg/L	EPA 160.2	06/04/03	TT
Oil and Grease	<5.	mg/L	EPA 1664	06/09/03	JW
pH	7.1	-----	*Client Supplied		
Temperature	69.	°F	*Client Supplied		
Dissolved Oxygen	6.5	mg/L	*Client Supplied		
Flow	0.0190	MGD	*Client Supplied		

Approved Signatory: Joy E Knight
Joy E. Knight
Environmental Laboratory Manager

P.O. Box 3327 • Paducah, KY 42002-3327 • email: aiilabs@bellsouth.net • www.aiilabs.com
(270) 898-8683 (270) 898-3531 Fa

A KENTUCKY CORPORATION

ANALYTICAL INDUSTRIES, INC.

ENVIRONMENTAL CONSULTANTS & CHEMICAL ANALYSTS

CLIENT: NORTH STAR STEEL KENTUCKY
P.O. BOX 468
CALVERT CITY, KY 42029

RELEASE NUMBER: 211047

PROJECT I.D.: STORMWATER

DATE COLLECTED: 05-07-03

SAMPLE I.D.: OUTFALL 003

DATE RECEIVED: 05-07-03

LABORATORY I.D.: 211047-01

DATE COMPLETED: 05-14-03

ANALYTE	*RESULT*	*UNITS*	*METHOD*	*DATE ANALYZED*	*ANALYST*
Hardness	76.	mg/L as $CaCO_3$	STD. MTDS. 2340B	05/14/03	JK
Total Suspended Solids	23	mg/L	EPA 160.2	05/09/03	TT
Oil and Grease	<5.	mg/L	EPA 1664	05/10/03	JW
pH	6.8	-----	*Client Supplied		
Temperature	68.	°F	*Client Supplied		
Dissolved Oxygen	5.9	mg/L	*Client Supplied		
Flow	0.8070	MGD	*Client Supplied		

Approved Signatory: Joy E Knight
Joy E. Knight
Environmental Laboratory Manager

P.O. Box 3327 • Paducah, KY 42002-3327 • email: aiilabs@bellsouth.net • www.aiilabs.com
(270) 898-8683 (270) 898-3531 Fax
A KENTUCKY CORPORATION

ANALYTICAL INDUSTRIES, INC.

ENVIRONMENTAL CONSULTANTS & CHEMICAL ANALYSTS

CLIENT: NORTH STAR STEEL KENTUCKY
P.O. BOX 468
CALVERT CITY, KY 42029

RELEASE NUMBER: 210879

PROJECT I.D.: STORMWATER

DATE COLLECTED: 04-02-03

SAMPLE I.D.: OUTFALL 003

DATE RECEIVED: 04-02-03

LABORATORY I.D.: 210879-01

DATE COMPLETED: 04-11-03

ANALYTE	*RESULT*	*UNITS*	*METHOD*	*DATE ANALYZED*	*ANALYST*
Hardness	49.	mg/L as $CaCO_3$	STD. MTDS. 2340B	04/11/03	JK
Total Suspended Solids	20	mg/L	EPA 160.2	04/03/03	JW
Oil and Grease	29.	mg/L	EPA 1664	04/04/03	JW
pH	6.9	----	*Client Supplied		
Temperature	65.	°F	*Client Supplied		
Dissolved Oxygen	6.7	mg/L	*Client Supplied		
Flow	0.0070	MGD	*Client Supplied		

Approved Signatory: Joy E Knight
Joy E. Knight
Environmental Laboratory Manager

P.O. Box 3327 • Paducah, KY 42002-3327 • email: aiilabs@bellsouth.net • www.aiilabs.com
(270) 898-8683 (270) 898-3531 Fax

A KENTUCKY CORPORATION

ANALYTICAL INDUSTRIES, INC.

ENVIRONMENTAL CONSULTANTS & CHEMICAL ANALYSTS

CLIENT: NORTH STAR STEEL KENTUCKY
P.O. BOX 468
CALVERT CITY, KY 42029

RELEASE NUMBER: 210759

PROJECT I.D.: STORMWATER

DATE COLLECTED: 03-05-03

SAMPLE I.D.: OUTFALL 003

DATE RECEIVED: 03-05-03

LABORATORY I.D.: 210759-01

DATE COMPLETED: 03-11-03

ANALYTE	*RESULT*	*UNITS*	*METHOD*	*DATE ANALYZED*	*ANALYST*
Hardness	124.	mg/L as $CaCO_3$	STD. MTDS. 2340B	03/11/03	JK
Total Suspended Solids	8	mg/L	EPA 160.2	03/07/03	JW
Oil and Grease	<5	mg/L	EPA 1664	03/07/03	JW
pH	6.9	----	*Client Supplied		
Temperature	50	°F	*Client Supplied		
Dissolved Oxygen	10.8	mg/L	*Client Supplied		
Flow	0.0550	MGD	*Client Supplied		

Approved Signatory: Joy E Knight
Joy E. Knight
Environmental Laboratory Manager

P.O. Box 3327 • Paducah, KY 42002-3327 • email: aiilabs@bellsouth.net • www.aiilabs.com
(270) 898-8683 (270) 898-3531 Fax

A KENTUCKY CORPORATION

ANALYTICAL INDUSTRIES INCORPORATED
(270) 898-8683
(270) 898-3531 Fax
email: allabs@bellsouth.net
P.O. Box 3327
Paducah, KY 42002-3327

CLIENT: NORTH STAR STEEL KENTUCKY
P.O. BOX 468
CALVERT CITY, KY 42029

RELEASE NUMBER: 210652

PROJECT I.D.: STORMWATER

DATE COLLECTED: 02-05-03

SAMPLE I.D.: OUTFALL 003

DATE RECEIVED: 02-05-03

LABORATORY I.D.: 210652-01

DATE COMPLETED: 02-08-03

ANALYTE	*RESULT*	*UNITS*	*METHOD*	*DATE ANALYZED*	*ANALYST*
Hardness	101.	mg/L as $CaCO_3$	STD. MTDS. 2340B	02/07/03	JK
Total Suspended Solids	3.3	mg/L	EPA 160.2	02/06/03	JW
Oil and Grease	<5	mg/L	EPA 1664	02/08/03	JW
pH	7.0	-----	*Client Supplied		
Temperature	42	°F	*Client Supplied		
Dissolved Oxygen	11.9	mg/L	*Client Supplied		
Flow	0.0360	MGD	*Client Supplied		

Approved Signatory: Joy E Knight
Joy E. Knight
Environmental Laboratory Manager

ANALYTICAL INDUSTRIES INCORPORATED

(270) 898-8683
(270) 898-3531 Fax
email: ailabs@bellsouth.net

P.O. Box 3327
Paducah, KY 42002-3327

CLIENT: NORTH STAR STEEL KENTUCKY
P.O. BOX 468
CALVERT CITY, KY 42029

RELEASE NUMBER: 210540

PROJECT I.D.: STORMWATER

DATE COLLECTED: 01-08-03

SAMPLE I.D.: OUTFALL 003

DATE RECEIVED: 01-08-03

LABORATORY I.D.: 210540-01

DATE COMPLETED: 01-21-03

ANALYTE	*RESULT*	*UNITS*	*METHOD*	*DATE ANALYZED*	*ANALYST*
Hardness	96.	mg/L as $CaCO_3$	STD. MTDS. 2340B	01/21/03	JJ
Total Suspended Solids	0.4087	mg/L	EPA 160.2	01/10/03	TT
Oil and Grease	<0.2919	mg/L	EPA 1664	01/14/03	JJ
pH	7.1	-----	*Client Supplied		
Temperature	45.	°F	*Client Supplied		
Dissolved Oxygen	9.8	mg/L	*Client Supplied		
Flow	0.0070	MGD	*Client Supplied		

Approved Signatory: Joy E Knight
Joy E. Knight
Env. Laboratory Manager

ANALYTICAL INDUSTRIES INCORPORATED
(270) 898-8683
(270) 898-3531 Fax
email: allabs@bellsouth.net
P.O. Box 3327
Paducah, KY 42002-3327

CLIENT: NORTH STAR STEEL KENTUCKY
P.O. BOX 468
CALVERT CITY, KY 42029

RELEASE NUMBER: 21(

PROJECT I.D.: STORMWATER

DATE COLLECTED: 12-1

SAMPLE I.D.: OUTFALL 003

DATE RECEIVED: 12-1

LABORATORY I.D.: 210417-01

DATE COMPLETED: 12-1

ANALYTE	*RESULT*	*UNITS*	*METHOD*	*DATE ANALYZED*	*ANAL*
Hardness	103.	mg/L as $CaCO_3$	STD. MTDS. 2340B	12/19/02	JJ
Total Suspended Solids	10.	mg/L	EPA 160.2	12/13/02	TT
Oil and Grease	<5.	mg/L	EPA 1664	12/18/02	JJ
pH	6.9	-----	*Client Supplied		
Temperature	43.	°F	*Client Supplied		
Dissolved Oxygen	10.3	mg/L	*Client Supplied		
Flow	0.1550	MGD	*Client Supplied		

Approved Signatory:
Jason R. Joyce, M.S.
Env. Laboratory Manager

ANALYTICAL INDUSTRIES INCORPORATED

Environmental Consultants & Chemical Analysts

NVLAP

CLIENT: NORTH STAR STEEL KENTUCKY
P.O. BOX 468
CALVERT CITY, KY 42029

RELEASE NUMBER: 210265

PROJECT I.D.: STORMWATER

DATE COLLECTED: 11-06-02

SAMPLE I.D.: OUTFALL 003

DATE RECEIVED: 11-06-02

LABORATORY I.D.: 210265-01

DATE COMPLETED: 11-13-02

ANALYTE	*RESULT*	*UNITS*	*METHOD*	*DATE ANALYZED*	*ANALYST*
Hardness	98.	mg/L as $CaCO_3$	STD. MTDS. 2340B	11/13/02	JJ
Total Suspended Solids	13.	mg/L	EPA 160.2	11/12/02	TT
Oil and Grease	<5.	mg/L	EPA 1664	11/12/02	JJ
pH	6.9	-----	*Client Supplied		
Temperature	59.	°F	*Client Supplied		
Dissolved Oxygen	7.3	mg/L	*Client Supplied		
Flow	0.0190	MGD	*Client Supplied		

Approved Signatory:
Jason R. Joyce
Env. Laboratory Manager

P.O. Box 3327 • Paducah, KY 42002-3327 • (270) 898-8683 • Fax (270) 898-3531 • e-mail: aiilabs@bellsouth.net
A Kentucky Corporation

ANALYTICAL INDUSTRIES INCORPORATED

NVLAP

Environmental Consultants & Chemical Analysts

CLIENT: NORTH STAR STEEL KENTUCKY
P.O. BOX 468
CALVERT CITY, KY 42029

RELEASE NUMBER: 210135

PROJECT I.D.: STORMWATER

DATE COLLECTED: 10-09-02

SAMPLE I.D.: OUTFALL 003

DATE RECEIVED: 10-09-02

LABORATORY I.D.: 210135-01

DATE COMPLETED: 10-22-02

ANALYTE	*RESULT*	*UNITS*	*METHOD*	*DATE ANALYZED*	*ANALYST*
Hardness	92.	mg/L as $CaCO_3$	STD. MTDS. 2340B	10/11/02	JJ
Total Suspended Solids	22.	mg/L	EPA 160.2	10/11/02	TT
Oil and Grease	<5.	mg/L	EPA 1664	10/22/02	JJ
pH	7.0	-----	*Client Supplied		
Temperature	72.	°F	*Client Supplied		
Dissolved Oxygen	5.7	mg/L	*Client Supplied		
Flow	0.0040	MGD	*Client Supplied		

Approved Signatory: Jammie Joyce
Jason R. Joyce
Env. Laboratory Manager

P.O. Box 3327 • Paducah, KY 42002-3327 • (270) 898-8683 • Fax (270) 898-3531 • e-mail: aiilabs@bellsouth.net
A Kentucky Corporation

ANALYTICAL INDUSTRIES INCORPORATED

Environmental Consultants & Chemical Analysts

NVLAP

CLIENT: NORTH STAR STEEL KENTUCKY
P.O. BOX 468
CALVERT CITY, KY 42029

RELEASE NUMBER: 210068

PROJECT I.D.: STORMWATER

DATE COLLECTED: 09-27-02

SAMPLE I.D.: OUTFALL 003

DATE RECEIVED: 09-27-02

LABORATORY I.D.: 210068-01

DATE COMPLETED: 10-09-02

ANALYTE	*RESULT*	*UNITS*	*METHOD*	*DATE ANALYZED*	*ANALYST*
Hardness	77.	mg/L as $CaCO_3$	STD. MTDS. 2340B	09/30/02	JJ
Total Suspended Solids	9.	mg/L	EPA 160.2	10/02/02	TT
Oil and Grease	<5.	mg/L	EPA 1664	10/09/02	JJ
pH	7.1	-----	*Client Supplied		
Temperature	67.	°F	*Client Supplied		
Dissolved Oxygen	7.2	mg/L	*Client Supplied		
Flow	0.4390	MGD	*Client Supplied		

Approved Signatory:
Jason R. Joyce
Env. Laboratory Manager

P.O. Box 3327 • Paducah, KY 42002-3327 • (270) 898-8683 • Fax (270) 898-3531 • e-mail: aiilabs@bellsouth.net
A Kentucky Corporation

Mass Calculations for
Outfalls 001, 002 003

001				
		Flow	**Concentration**	**Mass**
Parameter		**MGD**	**mg/L**	**lbs**
BOD		0.271	8.0	18.09
COD		0.271	69.0	156.03
TOC		0.271	39.0	88.19
TSS		0.271	34.0	76.89
TSS (LT)		0.101	10.9	9.19
Chloride		0.271	72	162.82
Chlorine		0.271	0.23	0.52
Hardness		0.235	173	339.25
Hardness (LT)		0.101	107.3	90.43
Iron		0.271	1.53	3.46
Moly		0.271	0.228	0.52
Mang		0.271	0.216	0.49
Arsenic		0.03	0.01	0.0025
Chromium		0.03	0.024	0.006
Copper		0.271	0.006	0.014
Lead		0.271	0.009	0.020
Mercury		0.03	0.002	0.001
Nickel		0.03	0.031	0.008
Zinc		0.271	0.01	0.023
002				
		Flow	**Concentration**	**Mass**
Parameter		**MGD**	**mg/L**	**lbs**
BOD		0.00018	6.0	0.009
BOD (LT)		0.00018	1.3	0.002
COD		0.00024	12.0	0.024
TOC		0.00024	24.0	0.048
TSS		0.00018	63.0	0.095
TSS (LT)		0.00018	6.2	0.009
Ammonia		0.00024	0.33	0.001
Ammonia (LT)		0.00018	0.06	0.0001
Chloride		0.00024	91	0.1822
Hardness		0.00024	170	0.3405
Iron		0.00024	0.054	0.0001
Mang		0.00024	0.013	0.00003
Chrom		0.00024	0.022	0.00004
Copper		0.00024	0.015	0.00003
Zinc		0.00024	0.025	0.00005
003				
		Flow	**Concentration**	**Mass**
Parameter		**MGD**	**mg/L**	**lbs**
BOD		0.007	9.0	0.526
COD		0.007	82.0	4.790
TOC		0.007	40.0	2.336
TSS		0.007	28.0	1.636
TSS (LT)		0.130	12.9	13.994
Chloride		0.007	87	5.082
Hardness		0.019	146	23.1477
Hardness (LT)		0.13	96.3	104.4648
O & G		0.007	29	1.6939
O & G (LT)		0.13	2.4	2.6035
Iron		0.007	1.43	0.0835
Moly		0.007	0.231	0.0135
Mang		0.007	0.215	0.0126
Copper		0.007	0.009	0.0005
Nickel		0.007	0.011	0.0006
Zinc		0.007	0.014	0.0008

LT - Long-Term Average

Response to KPDES Form F, Section IV (Narrative Description of Pollutant Sources), Section "B":

Provide a narrative description of significant materials that are currently or in the past three years have been treated, stored, or disposed in a manner to allow exposure to stormwater; method of treatment, storage, or disposal, past and present materials management practices employed to minimize contact by these materials with stormwater runoff, materials loading and access areas, and the location, manner, and frequency in which pesticides, herbicides, soil conditioners, and fertilizers are applied. "

General - North Star Steel Ky is a hot steel rolling mill. Various grades of steel billets are purchased from other NSS divisions and on the open market and are transported onto our plant site by truck and rail, in that order of predominance. Inside the plant, the billets are heated in a natural gas-fired furnace, rolled into various structural shapes, and cut to length. The finished product is shipped off-site by truck and rail. There are three permitted outfalls associated with our plant. Outfall 001 receives contact process water, sanitary wastewater from Outfall 002, and stormwater runoff from the west half of the plant site. Outfall 002 is exclusively for sanitary wastewater. Outfall 003 receives stormwater runoff from the east half of the plant site.

Those materials and process which could contribute to Outfall 003 are .addressed below:

- Steel Billets, Finished Product, and Scrap: Steel billets, finished product, and scrap steel, are stored both inside and outside on the site.

- Oil and Fuel: Oil and fuels are not exposed to any storm water runoff. All oils and fuels are stored within containment under roof. No runoff occurs from the storage of oils and fuels.

- Process Water: The facility's process water equipment is all on impervious surfaces and does not drain to any stormwater, outfalls. Any rainfall that occurs on the process water equipment, such as the clarifiers or scale pads, is directed into the open water system.

- Water Treatment Chemicals: No chromates are used on plant site for the treatment of waters. All water treatment chemicals are stored on impervious surfaces and are not exposed to any stormwater runoff.

- Propane: Housed on site are three 30,000 gallon propane tanks. The propane tanks are empty of liquid. The propane has been removed.

- Pesticides, Herbicides, Soil Conditioners, and Fertilizers: Pesticides and soil conditioners are not used on the site. Herbicides and fertilizers are used in limited areas on the site as shown on Attachment 5 no more than three times per year. Insecticides may be used around buildings where problems arise.